VERSTEEL

Price List

JUMP TO PRICING **CLICK HERE**

TABLES

Eliga
01 March 2024

Tops
Eliga X base tables are available in round and square top shapes. Rectangle, racetrack, boatshape and arc boatshape top shapes are available with the E-series tables, and the End-Sit tables are standard with rectangle top shapes. The laminate and veneer tops in the Eliga series are 1" thick with square corners.

Bases
The X base is constructed of a single square tube upright with four Eliga shaped feet. The E-Series and End-Sit table bases feature a parallelogram tube construction. The round and square tops can be specified with fixed or tilt bases in either 29" standard table height or 42" stand-up table height. The standard table height for the E-series and End-Sit tables is 29". When End-Sit tables are configured in a group setting the angles of the legs permit comfortable "end-seating" by creating a cove where the user can nest.

Modesty Panels
The 24" and 30" wide tables with four post legs may be specified with or without a modesty panel. The rectangle sliding table has a fixed modesty panel.

Features + Options
Tables are standard with nylon adjustable glides. Optional casters and table link are available where applicable. See individual pricing pages for additional available features such as fixed or slim tilt bases and sliding tops. Base and top options can also be found on page 72.

Power + Data
To complete your specification, power and data along with wire management options can be added to your table. Refer to the Power + Data Price List. All End-Sit bases feature an integrated wire manager in the leg.

Whiteboard
To complete your training room or collaborative environment an Eliga mobile whiteboard can be added to your specification. The whiteboard features dual-wheel locking casters, generous two-sided magnetic dry erase writing surface and a shelf on each side for marker and eraser storage. Whiteboard is available in all Versteel powder coat colors.

Laminate and Veneer, Standard Core Construction
The standard top construction consists of 45-50 lb particleboard, surfaced with a high pressure laminate or plain sliced veneer face. A backer sheet is laminated to the underside of the top. Tops are shipped pre-drilled for field installation of bases and accessories.

PVC Flat Edge

Edge of 2mm PVC hot melt banded to the top with ⅛" radius at the top and bottom. Available with 1 ½" radius corners or square corners.
Offered in twenty-one (21) standard colors.

Wood Flat Edge

Wood banding hot melt banded to the top with ⅛" radius at the top and bottom. Available with 1 ½" radius corners or square corners.

Offered in Ash, Cherry, Maple or Walnut materials.

Wood Square Edge

Edge of 1 ¼" wide solid wood with softened top and bottom edges, and square, softened mitered corners.

Offered in Ash, Cherry, Maple or Walnut materials.

Shipping Schedule

Standard Items

Laminate, PVC Edge	3-5 WEEKS
Laminate, Wood Edge	3-5 WEEKS
Veneer, Wood Edge	6-8 WEEKS

Contact Versteel Customer Service for special lead time requests.

BIFMA

All Versteel products are constructed to pass the relevant ANSI/BIFMA standards. For more detailed specifications by series and base style, contact Versteel Customer Service at 800.876.2120.

Additional information regarding warranty, terms and conditions, shipping, care and maintenance, etc. can be found in the All Tables price list.

To Order, Specify...

1. Model Number, include top and edge style
2. Top Material
   a. Laminate manufacturer and color
   b. Veneer species and finish color
3. Edge Color
4. Base Color
5. Additional Options

base model							finish selections					options
EG	TE	3072	RE	ST	LP7S	/	TP WW160-SD	/ CPRC	/ ECHR	/		CAS55
series	base style	top size	top shape	table function	top, edge & corner		top laminate manufacturer & laminate color	edge color	base color			base option

An EGTE 3072REST LP7S is an Eliga series 30" x 72" rectangle table with slim-tilt end-sit bases, a laminate 1" thick top with a PVC edge and square corners.

The codes TP WW160-SD / CPRC / ECHR specify a Pionite WW160-SD Pralines & Cream laminate, Pralines & Cream PVC and Chrome bases.

The code CAS55 specifies dual wheel black hard wheel casters.

Model Number EGTE 3072REST LP7S

Orders may be sent via

Mailing Address
Versteel
2332 Cathy Lane
Jasper IN 47546

Contact Versteel

Email contact@versteel.com
Phone 800 876 2120
812 634 2120
Fax 812 482 9318

Laminate

Versteel's standard offering of laminates includes over 900 laminates from Formica, Nevamar, Pionite and Wilsonart.

Laminate manufacturers change standard offerings frequently, making it possible a standard product can become unavailable. Versteel cannot be responsible for any inconvenience this may cause.

Veneer

Eliga tables are available with plain sliced Ash, Cherry, Maple and Walnut veneers.

Veneer Species

Ash	AP01	Maple	MP01
Cherry	CP01	Walnut	WP01

Veneer Finish

Ash

Beach	VBEA	Fog	VFOG
Chestnut	VCHE	Pebble	VPEB
Drift	VDRI	Whisper	VWHI
Fawn	VFAW		

Cherry

Blossom Cherry	VBLC	Java Cherry	VJAC
Cordovan Cherry	VCNC	Millwork Cherry	VMWC
Golden Cherry	VGNC		

Maple

Caramel Maple	VCMM	Sugar Maple	VSUM
Solar Maple	VSLM		

Walnut

Brighton Walnut	VBRW	Natural Walnut	VNAW
Espresso Walnut	VESW		

PVC Edge Colors

Absolute Acajou	CABA	Pearl	CPEA
Alloy	CALY	Platinum	CPLA
Carbon	CCAR	Pralines & Cream	CPRC
Champagne	CCHA	Shadow	CSHA
Coconut	CCOC	Snow	CSNO
Ebony	CEBO	Stone	CSTO
Florence Walnut	CFLW	Storm	CSTM
Fossil	CFOS	Whisper	CWHI
Graphite	CGRA	White Linen	CWHL
Grey	CGRE		
Kensington Maple	CKEM		
Nimbus	CNIM		

Wood Edge Species

Ash	A01	Maple	M01
Cherry	C01	Walnut	W01

Wood Edge Finishes

Ash

Beach	WBEA	Fog	WFOG
Chestnut	WCHE	Pebble	WPEB
Drift	WDRI	Whisper	WWHI
Fawn	WFAW		

Cherry

Blossom Cherry	WBLC	Java Cherry	WJAC
Cordovan Cherry	WCNC	Millwork Cherry	WMWC
Golden Cherry	WGNC		

Maple

Caramel Maple	WCMM	Sugar Maple	WSUM
Solar Maple	WSLM		

Walnut

Brighton Walnut	WBRW	Natural Walnut	WNAW
Espresso Walnut	WESW		

Studio Steel®

Versteel's "urban fabrication" process leaves the telltale signs of welding and assembly on the surface, highlighting a manufacturing aesthetic. Choosing a clear or transparent powder coat is recommended, allowing tonal striations (created as a result of extreme heat), natural textures, and the inherent qualities of raw steel to show through.

Studio Steel Process $165

Powder Coat Finishes

All powder coat finishes in the Versteel offering have been formulated with the use of epoxy, polyester or epoxy and polyester blends to maximize the finish durability.

Powder Coat Finish Options

Powder Coat - Standard . . . . . n/c
Powder Coat - Premium (Hope). $165
Powder Coat - Premium (Platinum) $488

Powder Coat Colors

Alloy. . . . . PALY
Amethyst . . . . . PAME
Anthracite. . . . . PANT
Black Anodized. . . . . PBLA
Bronze . . . . . PBRO
Calypso . . . . . PCAL
Carbon. . . . . PCAR
Champagne . . . . . PCHA
Coconut . . . . . PCOC
◆ Copper. . . . . PCOP
Crimson . . . . . PCRI
◆ Crystal . . . . . PCRY
Daffodil. . . . . PDAF
Ebony. . . . . PEBO
Forest. . . . . PFOR
Fossil . . . . . PFOS
◆ Garnet . . . . . PGAR
◆ Gold. . . . . PGOL
Graphite . . . . . PGRA
Ⓟ Hope . . . . . PHOP
Kelly Green . . . . . PKEG
◆ Matte . . . . . PMAT
Mica. . . . . PMIC
Mint . . . . . PMNT
Navy . . . . . PNAV
Nimbus. . . . . PNIM
Nutmeg . . . . . PNUT
◆ Pacific . . . . . PPAC
Pearl . . . . . PPEA
Pebble . . . . . PPEB
Ⓟ Platinum. . . . . PPLA
Poppy. . . . . PPOP
◆ Raven. . . . . PRAV
Royal . . . . . PROY
◆ Satin . . . . . PSAT
Seaside . . . . . PSEA
Shipyard. . . . . PSHI
Silver . . . . . PSIL
Snow . . . . . PSNO
Stone . . . . . PSTO
Storm. . . . . PSTM
Terra Cotta . . . . . PTEC
Whisper . . . . . PWHI
White Linen . . . . . PWHL
Powder Coat Alternative . OPA

Transparent Powder Coats (indicated by ◆)

Please note that the transparent characteristics of these powders allow all natural welds and textures inherent to raw steel to be visible. Transparent powder coat available on Eliga upon sample approval.

Premium Powder Coats (indicated by Ⓟ)

Versteel's premium process uses specially formulated powder coats for a truly unique color palette.

Chrome

Versteel applies a deep luster chrome plated finish. Chrome is the most durable finish available. Specify Chrome and add $649 list per table.

Chrome . . . . . ECHR

Nickel

Versteel applies a nickel plated finish with a clear coat applied for durability Specify Nickel and add $710 list per table.

Nickel . . . . . ENKL

NOTE CHROME AND NICKEL ARE NOT AVAILABLE ON THE ELIGA WHITEBOARD

Finish Reference & Samples

For finish color reference, please refer to our website. Contact Versteel Customer Service to receive actual color samples for color matches and final color approval.

Special Laminate

Call for quotation

Specify code **TSP** *(Special Laminate), indicate the quoted charges per table*

Special laminates and patterns can be specified as an option. To specify, contact Versteel Customer Service for availability and pricing.

NOTE LAMINATES IN STANDARD COLORS AND TEXTURES FROM FORMICA, NEVAMAR, PIONITE AND WILSONART ARE STANDARD

CAUTION LAMINATE MANUFACTURERS CHANGE STANDARD OFFERINGS FREQUENTLY, MAKING IT POSSIBLE A STANDARD PRODUCT CAN BECOME UNAVAILABLE. VERSTEEL CANNOT BE RESPONSIBLE FOR ANY INCONVENIENCE THIS MAY CAUSE.

Custom PVC Color Match

Call for quotation / one time charge per color, per order

Specify code **OCP** *(Custom PVC Color Match), add cost from Versteel quotation*

PVC Color Match can be the selection of a color that is available from a Versteel supplier or a new custom color developed for the order. Minimum footage requirements mean that the amount of material needed for your order will effect the cost.

For PVC Color Matching you must supply a color reference sample. Versteel will review the sample for possible existing colors available and send a sample for customer approval. If no color match exists, a custom match will be developed and sampled for customer approval before a production schedule is established.

Powder Coat Alternative

Call for quotation

Specify code **OPA** *(Powder Coat Alternative), add cost from Versteel quotation*

Powder Coat Alternative is available from Versteel. The entire RAL color reference along with hundreds of other color and finishes are available.

For Powder Coat Alternative matching, you must supply a color reference sample, or an RAL number. Versteel will review the sample for possible existing colors available and send a sample for customer approval. If no color match exists a custom match can be developed. Call Versteel Customer Service for associated upcharges on custom color development.

Stain Finish Match

$996 / one time charge per finish, per order

Specify code **OSM** *(Stain Finish Match), add $996.00 list per finish, per order*

Alternative Stain Finishes are available for veneer and wood edged tops.

For Stain Finish Matching you must supply two 4" x 4" finish color and grain reference samples. An expertly finish matched sample will be provided for customer approval.

Veneer and Wood Edge Alternatives

Call for quotation

For veneer and wood edge requirements other than the standard plain sliced Ash, Cherry, Maple and Walnut, contact Versteel Customer Service. Versteel is adept at working with a host of domestic and exotic materials. From inlays, figures, pie cuts and special edge profiles, to custom fill levels and sheens, each top is created using the best of technology and old world craftsmanship. The items you only imagined or expected to only be available from a millwork shop are now just another part of your Versteel order. Call Versteel Customer Service for availability and quotation.

Wood Finish Alternatives

Call for quotation

When veneer tables are required to have a finish other than the standard natural grain fill level finish appearance, semi-filled or full-filled finishes are available by requesting a quote from Versteel. Call Versteel Customer Service for availability and quotation.

Table Top and Edge Alternatives

Table tops and/or edges can be produced in alternative materials if desired. Contact Versteel Customer Service for pricing and availability.

Alternate Core Construction

Alternate core constructions are available, including medium density fiberboard (MDF), and cores that contain no urea formaldehyde. Contact Versteel Customer Service for pricing and availability.

NOTE CUSTOMS OR ALTERNATIVES MAY AFFECT STANDARD PRODUCTION SCHEDULES

Alternate Table Height 32" and Under

$196 / table

Specify code **BAH** *(Alternate Height 32" and under), indicate desired table height (32" or less), add $196.00 list per table*

Suggested typing height table is 26 ¾"
Suggested wheelchair height table is 32"
Suggested stand up height table is 42"

NOTE FOR OTHER TABLE HEIGHT REQUIREMENTS CONTACT VERSTEEL CUSTOMER SERVICE FOR STRUCTURAL DETAILS, PRICING AND AVAILABILITY

NOTE NOT ALL ELIGA TABLES ARE AVAILABLE WITH AN ALTERNATE TABLE HEIGHT. REFER TO PRICING PAGES OR CONTACT VERSTEEL CUSTOMER SERVICE.

Casters - Dual Hard Wheel Black Hard or Soft

$171 / table

Specify code CAS55 (Hard Wheel) or CAS57 (Soft Wheel), add $171.00 list per table

Dual wheel, black, 2" diameter, standard locking casters are available on X1 and TE base styles. Each is fitted into a reinforced caster receiver and must be specified at time of order. Caster option does not change the overall height of the table. See individual product pages for availability and ordering code.

Mix - Dual Hard Wheel Casters & Glides

$163 / table

Specify code **BMD** *(Mix - Dual Hard Wheel Casters & Glides), add $163.00 list per table*

Tables with TE bases can be specified with dual hard wheel, black, 2" diameter, standard locking casters on half of the table, with glides on the other half. Each caster is fitted into a reinforced receiver and must be specified at time of order. Mix option does not change the overall height of the table.

Casters - Dual Wheel Black Hard

$171 / table

Specify code CAS50 (Hard Wheel), add $171.00 list per table

Dual wheel, black, 2.15" diameter, standard locking casters are available on E1 and E2 base styles. Each is fitted into a reinforced caster receiver and must be specified at time of order. Caster option does not change the overall height of the table. See individual product pages for availability and ordering code.

Self-Leveling Glides

$49 / table

Specify code **GLD04** *(Self-Leveling Glides), add $49.00 list per table*

Self-Leveling Glides replace standard glides. This option allows the table to automatically compensate up to ½" for floors that are not level. Self-leveling glides increase overall table height by ¾". See individual product pages for availability.

Top Custom Cutout
$120 / cutout
Specify code TCC (Top Custom Cutout), add $120.00 list per cutout

Top Custom Cutout requires a drawing for production and is subject to approvals.

Table Link
$251 / table
Specify code TLK (Table Link), add $251.00 list per table

Table Link is for linking Versteel table configurations in typical room situations. Table link will prevent the accidental disconnection of power supply to adjacent tables. Available on tables with PVC, 3mm Wood, Wood Square, Wood Fluted and Ergo user side edge details.

Closed end link brackets are provided for tops without bases or tables with a base that does not allow the table to stand alone.

Table Link - Ends Only
$135 / table
Specify code TLE (Table Link - Ends Only), add $135.00 list per table

Table Link is for linking Versteel table configurations in typical room situations. Specify Table Link - Ends Only when your configuration requires linking on the table ends only. Available on tables with PVC, 3mm Wood, Wood Square, Wood Fluted and Ergo user side edge details. Table Link - Ends Only is included with electrical package options. This will prevent the accidental disconnection of power supply to adjacent tables.

Eliga
Round

Questions?
800 876 2120

			top ›	Laminate PVC	Laminate Wood	Laminate 1 ¼" Wood	Veneer Wood	Veneer 1 ¼" Wood
			edge ›	Flat	Flat	Square	Flat	Square
			edge ordering code ›	**LP7R**	**LW7R**	**LWS7**	**VW7R**	**VWS7**
			top thickness ›	1"	1"	1"	1"	1"
			top thickness price ›	1"	1"	1"	1"	1"
Base Style	**Table Description**	**Model #**	**Product Wt**					
X1	24 Fix	**EGX1 24RDFX**	30	992	1363	1736	2066	2206
	30 Fix	**EGX1 30RDFX**	35	1135	1603	2069	2428	2555
	36 Fix	**EGX1 36RDFX**	44	1310	1869	2428	2570	2752
	42 Fix	**EGX1 42RDFX**	53	1562	2209	2860	3111	3344
	48 Fix	**EGX1 48RDFX**	64	1590	2337	3081	3637	3924
X1S	24 Stand Fix	**EGX1S 24RDFX**	37	1028	1399	1774	2102	2244
	30 Stand Fix	**EGX1S 30RDFX**	44	1166	1633	2098	2459	2633
	36 Stand Fix	**EGX1S 36RDFX**	52	1341	1900	2459	2602	2782
	42 Stand Fix	**EGX1S 42RDFX**	62	1589	2239	2892	3140	3372
	48 Stand Fix	**EGX1S 48RDFX**	73	1620	2365	3110	3675	3955

X1

X1S

Note: Eliga X bases with power and data ship with modified top plates. Contact Versteel Customer Service for application specifics.

Note: Casters not available on stand up height.

To Order, Specify...
1. Model Number
2. Top Material
3. Edge Style and Thickness
4. Edge Color
5. Base Color
6. Additional Options

Base Options	Code	Price
Casters (4), Dual Wheel Black Hard Wheel	CAS55	$ 171
Casters (4), Dual Wheel Black Soft Wheel Available on X1 base	CAS57	$ 171
Self-Leveling Glides (4)	GLD04	$ 49

Finish Options

Chrome	$ 649
Nickel	$ 710
Powder Coat, Standard	n/c
Powder Coat, Premium	$ 165
Platinum	$ 488

Transparent Powder Coat available by sample approval

Top Options

Special Laminate	TSP	call
Custom Cutout (per cutout)	TCC	$ 120

Power + Data Options

Please reference the Power + Data Price List

NOTE HEMISPHERE AND NODE ARE RECOMMENDED FOR USE WITH ELIGA X BASES

Wire Management Options

1 Round Grommet, Provide Location Print	WRG	$ 76

Eliga
Square

Questions?
800 876 2120

			top ›	Laminate PVC	Laminate Wood	Laminate 1 ¼" Wood	Veneer Wood	Veneer 1 ¼" Wood
			edge ›	Flat	Flat	Square	Flat	Square
			edge ordering code (square corner) ›	**LP7S**	**LW7S**	**LWS7**	**VW7S**	**VWS7**
			top thickness ›	1"	1"	1"	1"	1"
			top thickness price ›	1"	1"	1"	1"	1"
Base Style	**Table Description**	**Model #**	**Product Wt**					
X1	24 Fix	**EGX1 24SQFX**	33	992	1363	1736	2066	2206
	30 Fix	**EGX1 30SQFX**	40	1135	1603	2069	2428	2555
	36 Fix	**EGX1 36SQFX**	50	1310	1869	2428	2570	2752
	42 Fix	**EGX1 42SQFX**	60	1562	2209	2860	3111	3344
	48 Fix	**EGX1 48SQFX**	75	1590	2337	3081	3637	3924
X1S	24 Stand Fix	**EGX1S 24SQFX**	40	1028	1399	1774	2102	2244
	30 Stand Fix	**EGX1S 30SQFX**	49	1166	1633	2098	2459	2633
	36 Stand Fix	**EGX1S 36SQFX**	58	1341	1900	2459	2602	2782
	42 Stand Fix	**EGX1S 42SQFX**	69	1589	2239	2892	3140	3372
	48 Stand Fix	**EGX1S 48SQFX**	84	1620	2365	3110	3675	3955

X1

X1S

Note: Eliga X bases with power and data ship with modified top plates. Contact Versteel Customer Service for application specifics.

Note: Casters not available on stand up height.

To Order, Specify...
1. Model Number
2. Top Material
3. Edge Style and Thickness
4. Edge Color
5. Base Color
6. Additional Options

Base Options	Code	Price
Casters (4), Dual Wheel Black Hard Wheel	CAS55	$ 171
Casters (4), Dual Wheel Black Soft Wheel Available on X1 base	CAS57	$ 171
Self-Leveling Glides (4)	GLD04	$ 49

Finish Options

Chrome	$ 649
Nickel	$ 710
Powder Coat, Standard	n/c
Powder Coat, Premium	$ 165
Platinum	$ 488

Transparent Powder Coat available by sample approval

Top Options

Special Laminate	TSP	call
Custom Cutout (per cutout)	TCC	$ 120

Power + Data Options

Please reference the Power + Data Price List

NOTE HEMISPHERE AND NODE ARE RECOMMENDED FOR USE WITH ELIGA X BASES

Wire Management Options

1 Round Grommet, Provide Location Print	WRG	$ 76

Eliga
Rectangle

Questions?
800 876 2120

			top ›	Laminate PVC	Laminate Wood	Laminate 1 ¼" Wood	Veneer Wood	Veneer 1 ¼" Wood
			edge ›	Flat	Flat	Square	Flat	Square
			edge ordering code (square corner) ›	**LP7S**	**LW7S**	**LWS7**	**VW7S**	**VWS7**
			top thickness ›	1"	1"	1"	1"	1"
			top thickness price ›	1"	1"	1"	1"	1"
Base Style	**Table Description**	**Model #**	**Product Wt**					
E1	18 x 48 Fix	**EGE1 1848REFX**	46	933	1409	1939	2114	2284
	18 x 48 Fix w/FixMod	**EGE1 1848REFX XM**	61	1336	1811	2344	2517	2689
	18 x 60 Fix	**EGE1 1860REFX**	55	1268	1860	2489	2843	3066
	18 x 60 Fix w/FixMod	**EGE1 1860REFX XM**	70	1670	2262	2892	3246	3472
	18 x 72 Fix	**EGE1 1872REFX**	64	1444	2111	2836	3295	3557
	18 x 72 Fix w/FixMod	**EGE1 1872REFX XM**	79	2009	2675	3399	3860	4122
	18 x 84 Fix	**EGE1 1884REFX**	73	1869	2602	3424	3830	4128
	18 x 84 Fix w/FixMod	**EGE1 1884REFX XM**	88	2434	3165	3989	4397	4693
	18 x 96 Fix	**EGE1 1896REFX**	82	1933	2771	3688	4244	4576
	18 x 96 Fix w/FixMod	**EGE1 1896REFX XM**	97	2499	3335	4253	4808	5141

To Order, Specify...
1. Model Number
2. Top Material
3. Edge Style and Thickness
4. Edge Color
5. Base Color
6. Additional Options

Base Options	Code	Price
Alternate Table Height 32" & Under	BAH	$ 196
Alternate Table Height 32" & Over	BSP	call
Casters (4), Dual Wheel Black Hard Wheel (to 72" length)	CAS50	$ 171

Finish Options

Chrome	$ 649
Nickel	$ 710
Powder Coat, Standard	n/c
Powder Coat, Premium	$ 165
Platinum	$ 488

Transparent Powder Coat available by sample approval

Top Options		
Table Link (all four sides)	TLK	$ 251
Table Link (18" ends only)	TLE	$ 135
Special Laminate	TSP	call
Custom Cutout (per cutout)	TCC	$ 120

Power + Data Options

Please reference the Power + Data Price List

Wire Management Options		
1 Oval Brush Grommet, Provide Location Print	WOG	$ 97
1 Round Grommet, Provide Location Print	WRG	$ 76
Eliga Wire Manager (each)	WEL	$ 56

Eliga
Rectangle

Questions?
800 876 2120

			top ›	Laminate PVC	Laminate Wood	Laminate 1 ¼" Wood	Veneer Wood	Veneer 1 ¼" Wood
			edge ›	Flat	Flat	Square	Flat	Square
			edge ordering code (square corner) ›	**LP7S**	**LW7S**	**LWS7**	**VW7S**	**VWS7**
			top thickness ›	1"	1"	1"	1"	1"
			top thickness price ›	1"	1"	1"	1"	1"
Base Style	**Table Description**	**Model #**	**Product Wt**					
E1	24 x 48 Fix	**EGE1 2448REFX**	55	1360	1939	2520	2541	2712
	24 x 48 Fix w/FixMod	**EGE1 2448REFX XM**	70	1763	2344	2923	2944	3115
	24 x 60 Fix	**EGE1 2460REFX**	66	1547	2225	2903	3109	3335
	24 x 60 Fix w/FixMod	**EGE1 2460REFX XM**	81	1949	2626	3307	3512	3740
	24 x 72 Fix	**EGE1 2472REFX**	77	1668	2441	3217	3497	3757
	24 x 72 Fix w/FixMod	**EGE1 2472REFX XM**	92	2073	2848	3622	3900	4162
	24 x 84 Fix	**EGE1 2484REFX**	88	1928	2798	3670	3862	4160
	24 x 84 Fix w/FixMod	**EGE1 2484REFX XM**	103	2493	3363	4234	4428	4725
	24 x 96 Fix	**EGE1 2496REFX**	99	1985	2953	3920	4276	4612
	24 x 96 Fix w/FixMod	**EGE1 2496REFX XM**	114	2550	3517	4485	4841	5177

To Order, Specify...
1. Model Number
2. Top Material
3. Edge Style and Thickness
4. Edge Color
5. Base Color
6. Additional Options

Base Options	Code	Price
Alternate Table Height 32" & Under	BAH	$ 196
Alternate Table Height 32" & Over	BSP	call
Casters (4), Dual Wheel Black Hard Wheel (to 72" length)	CAS50	$ 171

Finish Options

Chrome	$ 649
Nickel	$ 710
Powder Coat, Standard	n/c
Powder Coat, Premium	$ 165
Platinum	$ 488

Transparent Powder Coat available by sample approval

Top Options		
Table Link (all four sides)	TLK	$ 251
Table Link (24" ends only)	TLE	$ 135
Special Laminate	TSP	call
Custom Cutout (per cutout)	TCC	$ 120

Power + Data Options

Please reference the Power + Data Price List

Wire Management Options		
1 Oval Brush Grommet, Provide Location Print	WOG	$ 97
1 Round Grommet, Provide Location Print	WRG	$ 76
Eliga Wire Manager (each)	WEL	$ 56

Eliga
Rectangle

Questions?
800 876 2120

			top ›	Laminate PVC	Laminate Wood	Laminate 1 ¼" Wood	Veneer Wood	Veneer 1 ¼" Wood
			edge ›	Flat	Flat	Square	Flat	Square
			edge ordering code (square corner) ›	**LP7S**	**LW7S**	**LWS7**	**VW7S**	**VWS7**
			top thickness ›	1"	1"	1"	1"	1"
			top thickness price ›	1"	1"	1"	1"	1"
Base Style	**Table Description**	**Model #**	**Product Wt**					
E1	30 x 48 Fix	**EGE1 3048REFX**	63	1444	2073	2700	3211	3449
	30 x 48 Fix w/FixMod	**EGE1 3048REFX XM**	78	1848	2474	3105	3618	3854
	30 x 60 Fix	**EGE1 3060REFX**	76	1579	2307	3031	3972	4285
	30 x 60 Fix w/FixMod	**EGE1 3060REFX XM**	91	1982	2708	3432	4375	4688
	30 x 72 Fix	**EGE1 3072REFX**	89	1774	2594	3420	4509	4875
	30 x 72 Fix w/FixMod	**EGE1 3072REFX XM**	104	2339	3159	3984	5072	5439
	30 x 84 Fix	**EGE1 3084REFX**	102	2121	3039	3959	5076	5497
	30 x 84 Fix w/FixMod	**EGE1 3084REFX XM**	117	2686	3603	4524	5640	6062
	30 x 96 Fix	**EGE1 3096REFX**	115	2186	3203	4218	5689	6165
	30 x 96 Fix w/FixMod	**EGE1 3096REFX XM**	130	2749	3766	4782	6255	6731

To Order, Specify...
1. Model Number
2. Top Material
3. Edge Style and Thickness
4. Edge Color
5. Base Color
6. Additional Options

Base Options	Code	Price
Alternate Table Height 32" & Under	BAH	$ 196
Alternate Table Height 32" & Over	BSP	call
Casters (4), Dual Wheel Black Hard Wheel (to 72" length)	CAS50	$ 171

Finish Options

Chrome	$ 649
Nickel	$ 710
Powder Coat, Standard	n/c
Powder Coat, Premium	$ 165
Platinum	$ 488

Transparent Powder Coat available by sample approval

Top Options		
Table Link (all four sides)	TLK	$ 251
Table Link (30" ends only)	TLE	$ 135
Special Laminate	TSP	call
Custom Cutout (per cutout)	TCC	$ 120

Power + Data Options

Please reference the Power + Data Price List

Wire Management Options		
1 Oval Brush Grommet, Provide Location Print	WOG	$ 97
1 Round Grommet, Provide Location Print	WRG	$ 76
Eliga Wire Manager (each)	WEL	$ 56

Eliga
Rectangle
Sliding

Questions?
800 876 2120

			top ›	Laminate PVC	Laminate Wood	Laminate 1 ¼" Wood	Veneer Wood	Veneer 1 ¼" Wood
			edge ›	Flat	Flat	Square	Flat	Square
			edge ordering code (square corner) ›	**LP7S**	**LW7S**	**LWS7**	**VW7S**	**VWS7**
			top thickness ›	1"	1"	1"	1"	1"
			top thickness price ›	1"	1"	1"	1"	1"
Base Style	**Table Description**	**Model #**	**Product Wt**					
E2	24 x 48 Fix w/FixMod	**EGE2 2448REFX XM**	82	2594	3370	4281	3586	4301
	24 x 60 Fix w/FixMod	**EGE2 2460REFX XM**	96	2891	3757	4767	4247	5095
	24 x 72 Fix w/FixMod	**EGE2 2472REFX XM**	107	3110	4043	5129	4721	5662
	30 x 48 Fix w/FixMod	**EGE2 3048REFX XM**	97	2675	3477	4412	4229	5074
	30 x 60 Fix w/FixMod	**EGE2 3060REFX XM**	112	2921	3799	4820	5078	6096
	30 x 72 Fix w/FixMod	**EGE2 3072REFX XM**	126	3208	4171	5293	5693	6832

To Order, Specify...
1. Model Number
2. Top Material
3. Edge Style and Thickness
4. Edge Color
5. Base Color
6. Additional Options

Base Options	Code	Price
Casters (4), Dual Wheel Black Hard Wheel (to 72" length)	CAS50	$ 171

Finish Options		
Chrome		$ 649
Nickel		$ 710
Powder Coat, Standard		n/c
Powder Coat, Premium		$ 165
Platinum		$ 488

Transparent Powder Coat available by sample approval

Top Options		
Table Link (24" ends only)	TLE	$ 135
Special Laminate	TSP	call
Custom Cutout (per cutout)	TCC	$ 120

Power + Data Options		
Eliga Power (specify location) located in frame, not on table top (each)	EG1	$ 488
Power Infeed (each)	HNPU	$ 450

Wire Management Options		
Eliga Wire Manager (each)	WEL	$ 56

Eliga
Rectangle
Gathering

Questions?
800 876 2120

			top ›	Laminate PVC	Laminate Wood	Laminate 1 ¼" Wood	Veneer Wood	Veneer 1 ¼" Wood
			edge ›	Flat	Flat	Square	Flat	Square
			edge ordering code (square corner) ›	**LP7S**	**LW7S**	**LWS7**	**VW7S**	**VWS7**
			top thickness ›	1"	1"	1"	1"	1"
			top thickness price ›	1"	1"	1"	1"	1"
Base Style	**Table Description**	**Model #**	**Product Wt**					
E6S	42 x 72 Fix	**EGE6S 4272REFX**	138	3088	3972	4856	5972	6395
E5S	42 x 84 Fix	**EGE5S 4284REFX**	213	3552	4530	5506	6581	7058
	42 x 96 Fix	**EGE5S 4296REFX**	233	3622	4693	5762	7238	7780
	48 x 60 Fix	**EGE5S 4860REFX**	172	2517	3354	4192	5339	5733
	48 x 72 Fix	**EGE5S 4872REFX**	194	2796	3727	4654	6123	6590
	48 x 84 Fix	**EGE5S 4884REFX**	216	3217	4243	5266	6798	7336
	48 x 96 Fix	**EGE5S 4896REFX**	252	3665	4782	5896	7895	8504
	48 x 120 Fix	**EGE5S 48120REFX**	366	5668	6972	8276	12227	13101
	48 x 144 Fix	**EGE5S 48144REFX**	422	6216	7704	9192	14576	15680
	48 x 192 Fix	**EGE5S48192REFX**	515	7201	9060	10924	17462	18840
	60 x 72 Fix	**EGE5S 6072REFX**	229	3276	4448	5865	7464	8054
	60 x 84 Fix	**EGE5S 6084REFX**	251	3704	4937	6606	8013	8658
	60 x 96 Fix	**EGE5S 6096REFX**	273	3798	5138	6341	8876	9604
	60 x 120 Fix	**EGE5S 60120REFX**	411	5948	7344	8740	13596	14606
	60 x 144 Fix	**EGE5S 60144REFX**	475	6575	8158	9738	16539	17836
	60 x 192 Fix	**EGE5S 60192REFX**	584	7672	9627	11581	20092	21731
	60 x 240 Fix	**EGE5S 60240REFX**	685	9181	11506	13832	23951	25899

E6S/E5S
Standard Height (42")

To Order, Specify...
1. Model Number
2. Top Material
3. Edge Style and Thickness
4. Edge Color
5. Base Color
6. Additional Options

Finish Options	Code	Price
Chrome		$ 649
Nickel		$ 710
Powder Coat, Standard		n/c
Powder Coat, Premium		$ 165
Platinum		$ 488

Transparent Powder Coat available by sample approval

Top Options		
Special Laminate	TSP	call
Custom Cutout (per cutout)	TCC	$ 120

Power + Data Options

Please reference the Power + Data Price List

Wire Management Options		
1 Oval Brush Grommet, Provide Location Print	WOG	$ 97
1 Round Grommet, Provide Location Print	WRG	$ 76
Eliga Wire Manager (each)	WEL	$ 56

Eliga
Racetrack
Gathering

Questions?
800 876 2120

			top ›	Laminate PVC	Laminate Wood	Laminate 1 ¼" Wood	Veneer Wood	Veneer 1 ¼" Wood
			edge ›	Flat	Flat	Square	Flat	Square
			edge ordering code ›	**LP7R**	**LW7R**	**LWS7**	**VW7R**	**VWS7**
			top thickness ›	1"	1"	1"	1"	1"
			top thickness price ›	1"	1"	1"	1"	1"
Base Style	**Table Description**	**Model #**	**Product Wt**					
E5S Standard Height (42")	42 x 84 Fix	**EGE5S 4284RAFX**	175	3913	4888	5868	6748	7244
	42 x 96 Fix	**EGE5S 4296RAFX**	192	4000	5069	6141	7394	7951
	48 x 96 Fix	**EGE5S 4896RAFX**	221	4050	5166	6283	8088	8717
	48 x 120 Fix	**EGE5S 48120RAFX**	266	6141	7442	8747	12431	13325
	48 x 144 Fix	**EGE5S 48144RAFX**	390	6803	8291	9783	14901	16035
	60 x 144 Fix	**EGE5S 60144RAFX**	434	7233	8816	10395	16562	17859
	60 x 192 Fix	**EGE5S 60192RAFX**	540	8472	10425	12381	20092	21731
	60 x 240 Fix	**EGE5S 60240RAFX**	643	10131	12457	14782	24075	26034

To Order, Specify...
1. Model Number
2. Top Material
3. Edge Style and Thickness
4. Edge Color
5. Base Color
6. Additional Options

Finish Options	Code	Price
Chrome		$ 649
Nickel		$ 710
Powder Coat, Standard		n/c
Powder Coat, Premium		$ 165
Platinum		$ 488

Transparent Powder Coat available by sample approval

Top Options		
Special Laminate	TSP	call
Custom Cutout (per cutout)	TCC	$ 120

Power + Data Options

Please reference the Power + Data Price List

Wire Management Options		
1 Oval Brush Grommet, Provide Location Print	WOG	$ 97
1 Round Grommet, Provide Location Print	WRG	$ 76
Eliga Wire Manager (each)	WEL	$ 56

Eliga
Boat + Arc Boat Gathering

VERSTEEL

Questions?
800 876 2120

			top ›	Laminate PVC	Laminate Wood	Laminate 1 ¼" Wood	Veneer Wood	Veneer 1 ¼" Wood
			edge ›	Flat	Flat	Square	Flat	Square
			edge ordering code ›	**LP7R**	**LW7R**	**LWS7**	**VW7R**	**VWS7**
			top thickness ›	1"	1"	1"	1"	1"
			top thickness price ›	1"	1"	1"	1"	1"
Base Style	**Table Description**	**Model #**	**Product Wt**					
	Boat							
	42 x 48 x 96 Fix	**EGE5S 4296BTFX**	242	3869	4917	5959	7624	8214
	42 x 48 x 120 Fix	**EGE5S 42120BTFX**	364	5836	7053	8273	11721	12566
E5S Standard Height (42")	42 x 48 x 144 Fix	**EGE5S 42144BTFX**	409	6486	7878	9269	13912	14973
	48 x 60 x 192 Fix	**EGE5S 48192BTFX**	557	8283	10108	11938	16894	18238
	48 x 60 x 240 Fix	**EGE5S 48240BTFX**	652	9902	12076	14250	23213	25112
	Arc Boat							
	42 x 48 x 96 Fix	**EGE5S 4296ABFX**	239	3869	4917	5959	7617	8208
	42 x 48 x 120 Fix	**EGE5S 42120ABFX**	349	5836	7053	8273	11541	12369
	42 x 48 x 144 Fix	**EGE5S 42144ABFX**	404	6486	7878	9269	13641	14673
	48 x 60 x 192 Fix	**EGE5S 48192ABFX**	543	8283	10108	11938	19009	20564
	48 x 60 x 240 Fix	**EGE5S 48240ABFX**	647	9902	12076	14250	22858	24725

To Order, Specify...
1. Model Number
2. Top Material
3. Edge Style and Thickness
4. Edge Color
5. Base Color
6. Additional Options

Finish Options	Code	Price
Chrome		$ 649
Nickel		$ 710
Powder Coat, Standard		n/c
Powder Coat, Premium		$ 165
Platinum		$ 488

Transparent Powder Coat available by sample approval

Top Options		
Special Laminate	TSP	call
Custom Cutout (per cutout)	TCC	$ 120

Power + Data Options

Please reference the Power + Data Price List

Wire Management Options		
1 Oval Brush Grommet, Provide Location Print	WOG	$ 97
1 Round Grommet, Provide Location Print	WRG	$ 76
Eliga Wire Manager (each)	WEL	$ 56

Eliga
Rectangle
Conference

Questions?
800 876 2120

			top ›	Laminate PVC	Laminate Wood	Laminate 1 ¼" Wood	Veneer Wood	Veneer 1 ¼" Wood
			edge ›	Flat	Flat	Square	Flat	Square
			edge ordering code (square corner) ›	**LP7S**	**LW7S**	**LWS7**	**VW7S**	**VWS7**
			top thickness ›	1"	1"	1"	1"	1"
			top thickness price ›	1"	1"	1"	1"	1"
Base Style	**Table Description**	**Model #**	**Product Wt**					
E6	42 x 72 Fix	**EGE6 4272REFX**	128	3001	3886	4768	5887	6307
E5	42 x 84 Fix	**EGE5 4284REFX**	203	3468	4444	5420	6493	6973
E6/E5 Standard Height (29")	42 x 96 Fix	**EGE5 4296REFX**	242	3536	4605	5676	7152	7693
	48 x 96 Fix	**EGE5 4896REFX**	252	3577	4696	5811	7809	8418
	48 x 120 Fix	**EGE5 48120REFX**	346	5456	6760	8063	12014	12888
	48 x 144 Fix	**EGE5 48144REFX**	402	6077	7568	9056	14442	15543
	48 x 192 Fix	**EGE5 48192REFX**	495	6966	8827	10688	17227	18603
	60 x 120 Fix	**EGE5 60120REFX**	391	5911	7306	8702	13560	14570
	60 x 144 Fix	**EGE5 60144REFX**	455	6539	8121	9703	16500	17798
	60 x 192 Fix	**EGE5 60192REFX**	564	7561	9514	11470	19981	21620
	60 x 240 Fix	**EGE5 60240REFX**	665	9091	11419	13745	23863	25810

To Order, Specify...
1. Model Number
2. Top Material
3. Edge Style and Thickness
4. Edge Color
5. Base Color
6. Additional Options

Finish Options	Code	Price
Chrome		$ 649
Nickel		$ 710
Powder Coat, Standard		n/c
Powder Coat, Premium		$ 165
Platinum		$ 488

Transparent Powder Coat available by sample approval

Top Options		
Special Laminate	TSP	call
Custom Cutout (per cutout)	TCC	$ 120

Power + Data Options

Please reference the Power + Data Price List

Wire Management Options		
1 Oval Brush Grommet, Provide Location Print	WOG	$ 97
1 Round Grommet, Provide Location Print	WRG	$ 76
Eliga Wire Manager (each)	WEL	$ 56

Eliga
Racetrack
Conference

Questions?
800 876 2120

			top ›	Laminate PVC	Laminate Wood	Laminate 1 ¼" Wood	Veneer Wood	Veneer 1 ¼" Wood
			edge ›	Flat	Flat	Square	Flat	Square
			edge ordering code ›	**LP7R**	**LW7R**	**LWS7**	**VW7R**	**VWS7**
			top thickness ›	1"	1"	1"	1"	1"
			top thickness price ›	1"	1"	1"	1"	1"
Base Style	**Table Description**	**Model #**	**Product Wt**					
E5 Standard Height (29")	42 x 84 Fix	**EGE5 4284RAFX**	165	3827	4803	5780	6663	7157
	42 x 96 Fix	**EGE5 4296RAFX**	182	3913	4984	6051	7306	7864
	48 x 96 Fix	**EGE5 4896RAFX**	211	3963	5080	6195	8002	8627
	48 x 120 Fix	**EGE5 48120RAFX**	256	6051	7355	8658	12345	13237
	48 x 144 Fix	**EGE5 48144RAFX**	370	6693	8181	9671	14788	15923

To Order, Specify...
1. Model Number
2. Top Material
3. Edge Style and Thickness
4. Edge Color
5. Base Color
6. Additional Options

Finish Options	Code	Price
Chrome		$ 649
Nickel		$ 710
Powder Coat, Standard		n/c
Powder Coat, Premium		$ 165
Platinum		$ 488

Transparent Powder Coat available by sample approval

Top Options		
Special Laminate	TSP	call
Custom Cutout (per cutout)	TCC	$ 120

Power + Data Options

Please reference the Power + Data Price List

Wire Management Options		
1 Oval Brush Grommet, Provide Location Print	WOG	$ 97
1 Round Grommet, Provide Location Print	WRG	$ 76
Eliga Wire Manager (each)	WEL	$ 56

Eliga
Boat + Arc Boat Conference

VERSTEEL

Questions?
800 876 2120

			top ›	Laminate PVC	Laminate Wood	Laminate 1 ¼" Wood	Veneer Wood	Veneer 1 ¼" Wood
			edge ›	Flat	Flat	Square	Flat	Square
			edge ordering code ›	**LP7R**	**LW7R**	**LWS7**	**VW7R**	**VWS7**
			top thickness ›	1"	1"	1"	1"	1"
			top thickness price ›	1"	1"	1"	1"	1"
Base Style	**Table Description**	**Model #**	**Product Wt**					
	Boat							
	42 x 48 x 96 Fix	**EGE5 4296BTFX**	233	4055	5173	6290	8070	8702
	42 x 48 x 120 Fix	**EGE5 42120BTFX**	334	6158	7462	8765	12457	13360
E5 Standard Height (29")	42 x 48 x 144 Fix	**EGE5 42144BTFX**	389	6828	8317	9807	14777	15909
	48 x 60 x 192 Fix	**EGE5 48192BTFX**	537	8752	10705	12660	17965	19402
	48 x 60 x 240 Fix	**EGE5 48240BTFX**	632	10507	12835	15161	24750	26784
	Arc Boat							
	42 x 48 x 96 Fix	**EGE5 4296ABFX**	229	4055	5173	6290	8063	8698
	42 x 48 x 120 Fix	**EGE5 42120ABFX**	329	6158	7462	8765	12264	13147
	42 x 48 x 144 Fix	**EGE5 42144ABFX**	384	6828	8317	9807	14486	15588
	48 x 60 x 192 Fix	**EGE5 48192ABFX**	523	8752	10705	12660	20231	21892
	48 x 60 x 240 Fix	**EGE5 48240ABFX**	627	10507	12835	15161	24373	26369

To Order, Specify...
1. Model Number
2. Top Material
3. Edge Style and Thickness
4. Edge Color
5. Base Color
6. Additional Options

Finish Options	Code	Price
Chrome		$ 649
Nickel		$ 710
Powder Coat, Standard		n/c
Powder Coat, Premium		$ 165
Platinum		$ 488

Transparent Powder Coat available by sample approval

Top Options		
Special Laminate	TSP	call
Custom Cutout (per cutout)	TCC	$ 120

Power + Data Options

Please reference the Power + Data Price List

Wire Management Options		
1 Oval Brush Grommet, Provide Location Print	WOG	$ 97
1 Round Grommet, Provide Location Print	WRG	$ 76
Eliga Wire Manager (each)	WEL	$ 56

Eliga
Collaborative D
4-Leg

Questions?
800 876 2120

❹ Indicates Number of Bases

			top ›	Laminate PVC	Laminate Wood	Laminate 1 ¼" Wood	Veneer Wood	Veneer 1 ¼" Wood
			edge ›	Flat	Flat	Square	Flat	Square
			edge ordering code (square corner) ›	**LP7S**	**LW7S**	**LWS7**	**VW7S**	**VWS7**
			top thickness ›	1"	1"	1"	1"	1"
			top thickness price ›	1"	1"	1"	1"	1"
Base Style	**Table Description**	**Model #**	**Product Wt**					
E7 Standard Height (29")	48 x 72 Fix	**EGE7 4872CDFX ❹**	183	3169	4105	5327	6245	6698
	48 x 84 Fix	**EGE7 4884CDFX ❹**	207	3678	4906	6506	6940	7455
	48 x 96 Fix	**EGE7 4896CDFX ❹**	220	3807	5080	6743	7685	8268
	60 x 72 Fix	**EGE7 6072CDFX ❹**	223	3591	4775	6320	7288	7840
	60 x 84 Fix	**EGE7 6084CDFX ❹**	254	4063	5512	7405	8136	8771
	60 x 96 Fix	**EGE7 6096CDFX ❹**	284	4192	5688	7635	9044	9763

To Order, Specify...
1. Model Number
2. Top Material
3. Edge Style and Thickness
4. Edge Color
5. Base Color
6. Additional Options

Finish Options	Code	Price
Chrome		$ 649
Nickel		$ 710
Powder Coat, Standard		n/c
Powder Coat, Premium		$ 165
Platinum		$ 488

Transparent Powder Coat available by sample approval

Top Options		
Special Laminate	TSP	call
Custom Cutout (per cutout)	TCC	$ 120

Power + Data Options

Please reference the Power + Data Price List

Wire Management Options		
1 Oval Brush Grommet, Provide Location Print	WOG	$ 97
1 Round Grommet, Provide Location Print	WRG	$ 76
Eliga Wire Manager (each)	WEL	$ 56

Eliga
Collaborative D
2-Leg

Questions?
800 876 2120

❷ Indicates Number of Bases

			top ›	Laminate PVC	Laminate Wood	Laminate 1 ¼" Wood	Veneer Wood	Veneer 1 ¼" Wood
			edge ›	Flat	Flat	Square	Flat	Square
			edge ordering code (square corner) ›	**LP7S**	**LW7S**	**LWS7**	**VW7S**	**VWS7**
			top thickness ›	1"	1"	1"	1"	1"
			top thickness price ›	1"	1"	1"	1"	1"
Base Style	**Table Description**	**Model #**	**Product Wt**					
E8 Standard Height (29")	48 x 72 Fix	**EGE8 4872CDFX ❷**	183	2920	3858	5080	5996	6451
	48 x 84 Fix	**EGE8 4884CDFX ❷**	207	3428	4654	6258	6693	7207
	48 x 96 Fix	**EGE8 4896CDFX ❷**	220	3560	4830	6493	7436	8020
	60 x 72 Fix	**EGE8 6072CDFX ❷**	223	3343	4528	6072	7040	7592
	60 x 84 Fix	**EGE8 6084CDFX ❷**	254	3813	5266	7157	7891	8520
	60 x 96 Fix	**EGE8 6096CDFX ❷**	284	3944	5441	7386	8795	9514

Note: Table includes wall mount brackets.

To Order, Specify...
1. Model Number
2. Top Material
3. Edge Style and Thickness
4. Edge Color
5. Base Color
6. Additional Options

Finish Options	Code	Price
Chrome		$ 649
Nickel		$ 710
Powder Coat, Standard		n/c
Powder Coat, Premium		$ 165
Platinum		$ 488

Transparent Powder Coat available by sample approval

Top Options		
Special Laminate	TSP	call
Custom Cutout (per cutout)	TCC	$ 120

Power + Data Options

Please reference the Power + Data Price List

Wire Management Options		
1 Oval Brush Grommet, Provide Location Print	WOG	$ 97
1 Round Grommet, Provide Location Print	WRG	$ 76
Eliga Wire Manager (each)	WEL	$ 56

Eliga
Rectangle
End-Sit

Questions?
800 876 2120

			top ›	Laminate PVC	Laminate Wood	Laminate 1 ¼" Wood	Veneer Wood	Veneer 1 ¼" Wood
			edge ›	Flat	Flat	Square	Flat	Square
			edge ordering code (square corner) ›	**LP7S**	**LW7S**	**LWS7**	**VW7S**	**VWS7**
			top thickness ›	1"	1"	1"	1"	1"
			top thickness price ›	1"	1"	1"	1"	1"
Base Style	**Table Description**	**Model #**	**Product Wt**					
TE	24 x 48 Fix	**EGTE 2448REFX**	55	1247	1697	1956	2573	2727
	24 x 48 Slim-Tilt	**EGTE 2448REST**	64	1767	2217	2468	3036	3239
	24 x 60 Fix	**EGTE 2460REFX**	63	1332	1819	2181	2780	3012
	24 x 60 Slim-Tilt	**EGTE 2460REST**	75	1849	2217	2780	3291	3523
	24 x 72 Fix	**EGTE 2472REFX**	70	1528	2134	2458	3012	3268
	24 x 72 Slim-Tilt	**EGTE 2472REST**	85	2041	2655	2968	3523	3780
	24 x 84 Fix	**EGTE 2484REFX**	94	1611	2364	2780	3302	3595
	24 x 84 Slim-Tilt	**EGTE 2484REST**	97	2128	2882	3291	3813	4105
	24 x 90 Fix	**EGTE 2490REFX**	100	1742	2567	3028	3598	3914
	24 x 90 Slim-Tilt	**EGTE 2490REST**	103	2269	3063	3541	4138	4422
	24 x 96 Fix	**EGTE 2496REFX**	105	1862	2726	3232	3706	4029
	24 x 96 Slim-Tilt	**EGTE 2496REST**	109	2378	3246	3744	4212	4543

To Order, Specify...
1. Model Number
2. Top Material
3. Edge Style and Thickness
4. Edge Color
5. Base Color
6. Additional Options

Base Options	Code	Price
Casters (4), Dual Wheel Black Hard Wheel (to 72" length)	CAS55	$ 171
Casters (4), Dual Wheel Black Soft Wheel (to 72" length)	CAS57	$ 171

Finish Options	
Chrome	$ 649
Nickel	$ 710
Powder Coat, Standard	n/c
Powder Coat, Premium	$ 165
Platinum	$ 488

Top Options		
Table Link (all four sides)	TLK	$ 251
Special Laminate	TSP	call
Custom Cutout (per cutout)	TCC	$ 120

Power + Data Options

Please reference the Power + Data Price List

Wire Management Options		
1 Oval Brush Grommet, Location A	WOA	$ 97
2 Oval Brush Grommets, Location E	WOE	$ 194
1 Oval Brush Grommet, Provide Location Print	WOG	$ 97
1 Round Grommet, Location A	WRA	$ 76
2 Round Grommets, Location E	WRE	$ 152
1 Round Grommet, Provide Location Print	WRG	$ 76

Eliga
Rectangle
End-Sit

Questions?
800 876 2120

			top ›	Laminate PVC	Laminate Wood	Laminate 1 ¼" Wood	Veneer Wood	Veneer 1 ¼" Wood
			edge ›	Flat	Flat	Square	Flat	Square
			edge ordering code (square corner) ›	**LP7S**	**LW7S**	**LWS7**	**VW7S**	**VWS7**
			top thickness ›	1"	1"	1"	1"	1"
			top thickness price ›	1"	1"	1"	1"	1"
Base Style	**Table Description**	**Model #**	**Product Wt**					
TE	30 x 48 Fix	**EGTE 3048REFX**	63	1375	1846	2070	2782	3013
	30 x 48 Slim-Tilt	**EGTE 3048REST**	75	1895	2364	2581	3294	3525
	30 x 60 Fix	**EGTE 3060REFX**	73	1460	2065	2377	3217	3328
	30 x 60 Slim-Tilt	**EGTE 3060REST**	87	1978	2581	2885	3575	3837
	30 x 72 Fix	**EGTE 3072REFX**	83	1573	2283	2664	3406	3710
	30 x 72 Slim-Tilt	**EGTE 3072REST**	100	2086	2798	3175	3920	4222
	30 x 84 Fix	**EGTE 3084REFX**	109	1687	2576	3179	3716	4051
	30 x 84 Slim-Tilt	**EGTE 3084REST**	114	2202	3092	3542	4224	4560
	30 x 90 Fix	**EGTE 3090REFX**	116	1800	2780	3306	4046	4415
	30 x 90 Slim-Tilt	**EGTE 3090REST**	121	2309	3238	3813	4552	4912
	30 x 96 Fix	**EGTE 3096REFX**	122	1894	2953	3518	4153	4536
	30 x 96 Slim-Tilt	**EGTE 3096REST**	128	2412	3472	4029	4665	5049

To Order, Specify...
1. Model Number
2. Top Material
3. Edge Style and Thickness
4. Edge Color
5. Base Color
6. Additional Options

Base Options	Code	Price
Casters (4), Dual Wheel Black Hard Wheel (to 72" length)	CAS55	$ 171
Casters (4), Dual Wheel Black Soft Wheel (to 72" length)	CAS57	$ 171

Finish Options		
Chrome		$ 649
Nickel		$ 710
Powder Coat, Standard		n/c
Powder Coat, Premium		$ 165
Platinum		$ 488

Top Options		
Table Link (all four sides)	TLK	$ 251
Special Laminate	TSP	call
Custom Cutout (per cutout)	TCC	$ 120

Power + Data Options

Please reference the Power + Data Price List

Wire Management Options		
1 Oval Brush Grommet, Location A	WOA	$ 97
2 Oval Brush Grommets, Location E	WOE	$ 194
1 Oval Brush Grommet, Provide Location Print	WOG	$ 97
1 Round Grommet, Location A	WRA	$ 76
2 Round Grommets, Location E	WRE	$ 152
1 Round Grommet, Provide Location Print	WRG	$ 76

Eliga
Whiteboard

Questions?

800 876 2120

Finish Options

Powder Coat, Standard	n/c
Powder Coat, Premium	$ 165
Platinum	$ 488

Transparent Powder Coats available by sample approval

	Description	Model #	Product Wt	Price
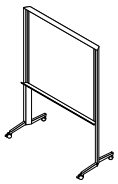	21 x 48 x 69	**EG 4342WB**	90	3576

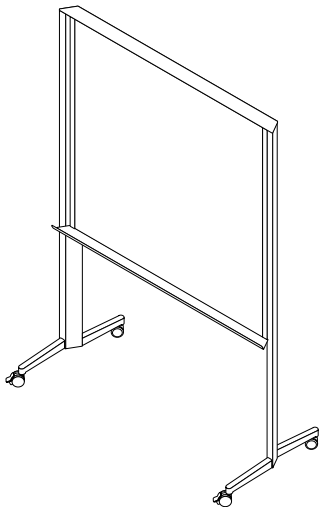

Features

Two sided magnetic dry erase writing surface
Dual wheel locking caster only
Integrated storage shelf on each side
Writing surface dimensions: 42" w x 43" h
Overall width: 48"
Overall depth: 21"
Overall height: 69"

To Order, Specify...

1. Model Number
2. Frame Color

Tops
Eliga Training tables are available with rectangle shape tops ranging from 20" to 30" wide and 48" to 96" in length. The 1" laminate tops can be specified with a flat PVC or flat wood edge with square corners.

Bases
Fixed and slim-tilt T bases are all standard with nylon adjustable glides. Bases are inset from the edge of the table to allow for additional leg room.

Modesty Panels
Eliga training tables can be specified with or without a modesty panel. Refer to the Modesty Panel Construction Specifications page and the individual pricing pages for additional information.

Power + Data
To complete your specification, power and data, along with wire management options, can be added to your table. Refer to the Power + Data Price List.

NOTE EXCLUSIONS REGARDING EDGE THICKNESS, BASE FUNCTIONS AND HEIGHT MAY APPLY, REFER TO INDIVIDUAL PRICING PAGES FOR COMPLETE PRODUCT OFFERING

Laminate Standard Core Construction
The standard top construction consists of 45-50 lb particleboard, surfaced with a high pressure laminate face. A backer sheet is laminated to the underside of the top. Tops are shipped pre-drilled for field installation of bases and accessories.

PVC Flat Edge

Edge of 2mm PVC hot melt banded to the top with ⅛" radius at the top and bottom, with 1 ½" square corners.
Offered in twenty-one (21) standard colors.

Wood Flat Edge

Wood banding hot melt banded to the top with ⅛" radius at the top and bottom, with square corners.
Offered in Ash, Cherry, Maple or Walnut materials.

Shipping Schedule

Standard Items

Laminate, PVC Edge	3-5 WEEKS
Laminate, Wood Edge	3-5 WEEKS

Contact Versteel Customer Service for special lead time requests.

BIFMA

All Versteel products are constructed to pass the relevant ANSI/BIFMA standards. For more detailed specifications by series and base style, contact Versteel Customer Service at 800.876.2120.

Additional information regarding warranty, terms and conditions, shipping, care and maintenance, etc. can be found in the All Tables price list.

Laminate Modesty, General Core Construction
The modesty panel is constructed of ⅞" thick, 45-50 lb. medium density particle board surfaced with high pressure laminate face on both sides. See individual styles below for panel heights per series. Modesty panel extends the length of the top and is located along the front edge of the table for maximum leg and knee clearance.

Fixed Modesty (FixMod XM)
The Fixed Modesty panel is mounted to the top with screws through steel brackets and must be field installed into pre-drilled positions in the top. Panel is 10" high with the following exceptions: Eliga (E1 bases) 7", Paces and Vela 8". All mounting hardware is packed with the modesty panel. Finish details match the top unless specified differently.

Removable Modesty (RemMod RM)
The Removable Modesty panel slides into heavy duty steel brackets that are mounted to the top. Simply tighten the handwheels to keep the modesty panel in position or loosen to remove the panel. For storage, the modesty attachment pins can be rotated 90° to prevent marring of the top surfaces. Panel is 10" high with the following exceptions: Eliga (E1 bases) 7", Paces and Vela 8". Finish details match the top unless specified differently.

Hanging Modesty (HangMod HM)
The hanging modesty is mounted to the top with a metal hinge that is factory installed. This mechanism pivots if the table is tilted to allow for a 90 degree slim-tilt. All hanging modesty panels are 8½" high. Finish details match the top unless specified differently.

Form Metal Modesty, General Construction
The modesty panel is constructed with an aluminum extruded back panel and a perforated hinged steel door. There are three (3) separate unobstructed channels that allow the routing of power and data cables, with a wire exit on the back for the top and middle channel. The Form Modesty panel is 10" high and extends the length of the top. The Form Modesty panel is located along the front edge of the table for maximum leg and knee clearance. Accessory end cap trim kit available.

Fixed Form Modesty (FixFormMod XF)
The Fixed Form Modesty panel is mounted to the top with screws through steel brackets. The fixed modesty panel must be field installed into pre-drilled positions in the top. All mounting hardware is packed with the modesty panel. Extruded back panel is black with powder coat options for the perforated steel door. Powder coat finish on perforated door matches the base finish unless specified differently. Transparent powder coat finishes are not available. The panel will be radius with round holes.

Fixed Lightweight Form Modesty
(FixLightweightFormMod XL)
The Fixed Lightweight Form Modesty panel is a lightweight version of the Versteel Form Modesty. It is a formed steel perforated panel that is mounted to the top with screws through steel brackets. It must be field installed into pre-drilled positions in the top. A deep channel in the back of the panel allows for the routing of power and data cables inside of the modesty. Mounting hardware is packed with the modesty panel. Powder coat finish on the perforated panel matches the base finish unless specified differently. Transparent powder coat finishes are not available. The panel will be radius with round holes.

Removable Lightweight Form Modesty
(RemLightweightFormMod RL)
The Removable Lightweight Form Modesty panel slides into heavy duty steel brackets that are mounted to the top. Simply tighten the handwheels to secure the modesty in position or loosen them to remove the panel. Powder coat finish on the perforated panel matches the base finish unless specified differently. Transparent powder coat finishes are not available. The panel will be radius with round holes.

To Order, Specify...

1. Model Number, include top and edge style
2. Top Material
   a. Laminate manufacturer and color
   b. Veneer species and finish color
3. Edge Color
4. Base Color
5. Additional Options

base model								finish selections					options
EG	T1	2472	RE	FX	XM	LP7S	/	TP WW160-SD	/	CPRC	/	PNIM	/ CAS55
series	base style	top size	top shape	table function	modesty function	top, edge & corner		top laminate manufacture & laminate code		edge color		base color	options

An EGT1 2472REFX XM L72S is an Eliga series 24" x 72" rectangle training table with fixed T1 bases, a fixed modesty and a laminate 1" thick top with a PVC edge and square corners.

The codes TP WW160-SD / CPRC / PNIM specify a Pionite WW160-SD Pralines & Cream laminate, Pralines & Cream PVC edge and Nimbus bases.

CAS55 adds dual wheel black hard wheel casters.

Model Number EGT1 2472REFX XM

Orders may be sent via

Mailing Address
Versteel
2332 Cathy Lane
Jasper IN 47546

Contact Versteel

Email contact@versteel.com
Phone 800 876 2120
812 634 2120
Fax 812 482 9318

Laminate

Versteel's standard offering of laminates includes over 900 laminates from Formica, Nevamar, Pionite and Wilsonart.

Laminate manufacturers change standard offerings frequently, making it possible a standard product can become unavailable. Versteel cannot be responsible for any inconvenience this may cause.

PVC Edge Colors

Absolute Acajou	CABA	Pearl	CPEA
Alloy	CALY	Platinum	CPLA
Carbon	CCAR	Pralines & Cream	CPRC
Champagne	CCHA	Shadow	CSHA
Coconut	CCOC	Snow	CSNO
Ebony	CEBO	Stone	CSTO
Florence Walnut	CFLW	Storm	CSTM
Fossil	CFOS	Whisper	CWHI
Graphite	CGRA	White Linen	CWHL
Grey	CGRE		
Kensington Maple	CKEM		
Nimbus	CNIM		

Wood Edge Species

Ash	A01	Maple	M01
Cherry	C01	Walnut	W01

Wood Edge Finishes

Ash

Beach	WBEA	Fog	WFOG
Chestnut	WCHE	Pebble	WPEB
Drift	WDRI	Whisper	WWHI
Fawn	WFAW		

Cherry

Blossom Cherry	WBLC	Java Cherry	WJAC
Cordovan Cherry	WCNC	Millwork Cherry	WMWC
Golden Cherry	WGNC		

Maple

Caramel Maple	WCMM	Sugar Maple	WSUM
Solar Maple	WSLM		

Walnut

Brighton Walnut	WBRW	Natural Walnut	WNAW
Espresso Walnut	WESW		

Studio Steel®

Versteel's "urban fabrication" process leaves the telltale signs of welding and assembly on the surface, highlighting a manufacturing aesthetic. Choosing a clear or transparent powder coat is recommended, allowing tonal striations (created as a result of extreme heat), natural textures, and the inherent qualities of raw steel to show through.

Studio Steel Process $165

Powder Coat Finishes

All powder coat finishes in the Versteel offering have been formulated with the use of epoxy, polyester or epoxy and polyester blends to maximize the finish durability.

Powder Coat Finish Options

Powder Coat - Standard . . . . . n/c
Powder Coat - Premium (Hope). $165
Powder Coat - Premium (Platinum) $488

Powder Coat Colors

Alloy. . . . . PALY
Amethyst . . . . . PAME
Anthracite. . . . . PANT
Black Anodized. . . . . PBLA
Bronze . . . . . PBRO
Calypso . . . . . PCAL
Carbon. . . . . PCAR
Champagne . . . . . PCHA
Coconut . . . . . PCOC
◆ Copper. . . . . PCOP
Crimson . . . . . PCRI
◆ Crystal . . . . . PCRY
Daffodil. . . . . PDAF
Ebony. . . . . PEBO
Forest. . . . . PFOR
Fossil . . . . . PFOS
◆ Garnet . . . . . PGAR
◆ Gold. . . . . PGOL
Graphite . . . . . PGRA
Ⓟ Hope . . . . . PHOP
Kelly Green . . . . . PKEG
◆ Matte . . . . . PMAT
Mica. . . . . PMIC
Mint . . . . . PMNT
Navy . . . . . PNAV
Nimbus. . . . . PNIM
Nutmeg . . . . . PNUT
◆ Pacific . . . . . PPAC
Pearl . . . . . PPEA
Pebble . . . . . PPEB
Ⓟ Platinum. . . . . PPLA
Poppy. . . . . PPOP
◆ Raven. . . . . PRAV
Royal . . . . . PROY
◆ Satin . . . . . PSAT
Seaside . . . . . PSEA
Shipyard. . . . . PSHI
Silver . . . . . PSIL
Snow . . . . . PSNO
Stone . . . . . PSTO
Storm. . . . . PSTM
Terra Cotta . . . . . PTEC
Whisper . . . . . PWHI
White Linen . . . . . PWHL
Powder Coat Alternative . OPA

Transparent Powder Coats (indicated by ◆)

Please note that the transparent characteristics of these powders allow all natural welds and textures inherent to raw steel to be visible. Transparent powder coat available on Eliga upon sample approval.

Premium Powder Coats (indicated by Ⓟ)

Versteel's premium process uses specially formulated powder coats for a truly unique color palette.

Chrome

Versteel applies a deep luster chrome plated finish. Chrome is the most durable finish available. Specify Chrome and add $649 list per table.

Chrome . . . . . ECHR

Nickel

Versteel applies a nickel plated finish with a clear coat applied for durability Specify Nickel and add $710 list per table.

Nickel . . . . . ENKL

NOTE CHROME AND NICKEL ARE NOT AVAILABLE ON THE ELIGA WHITEBOARD

Finish Reference & Samples

For finish color reference, please refer to our website. Contact Versteel Customer Service to receive actual color samples for color matches and final color approval.

Special Laminate

Call for quotation

Specify code **TSP** *(Special Laminate), indicate the quoted charges per table*

Special laminates and patterns can be specified as an option. To specify, contact Versteel Customer Service for availability and pricing.

NOTE LAMINATES IN STANDARD COLORS AND TEXTURES FROM FORMICA, NEVAMAR, PIONITE AND WILSONART ARE STANDARD

CAUTION LAMINATE MANUFACTURERS CHANGE STANDARD OFFERINGS FREQUENTLY, MAKING IT POSSIBLE A STANDARD PRODUCT CAN BECOME UNAVAILABLE. VERSTEEL CANNOT BE RESPONSIBLE FOR ANY INCONVENIENCE THIS MAY CAUSE.

Custom PVC Color Match

Call for quotation / one time charge per color, per order

Specify code **OCP** *(Custom PVC Color Match), add cost from Versteel quotation*

PVC Color Match can be the selection of a color that is available from a Versteel supplier or a new custom color developed for the order. Minimum footage requirements mean that the amount of material needed for your order will effect the cost.

For PVC Color Matching you must supply a color reference sample. Versteel will review the sample for possible existing colors available and send a sample for customer approval. If no color match exists, a custom match will be developed and sampled for customer approval before a production schedule is established.

Powder Coat Alternative

Call for quotation

Specify code **OPA** *(Powder Coat Alternative), add cost from Versteel quotation*

Powder Coat Alternative is available from Versteel. The entire RAL color reference along with hundreds of other color and finishes are available.

For Powder Coat Alternative matching, you must supply a color reference sample, or an RAL number. Versteel will review the sample for possible existing colors available and send a sample for customer approval. If no color match exists a custom match can be developed. Call Versteel Customer Service for associated upcharges on custom color development.

Stain Finish Match

$996 / one time charge per finish, per order

Specify code **OSM** *(Stain Finish Match), add $996.00 list per finish, per order*

Alternative Stain Finishes are available for veneer and wood edged tops.

For Stain Finish Matching you must supply two 4" x 4" finish color and grain reference samples. An expertly finish matched sample will be provided for customer approval.

NOTE CUSTOMS OR ALTERNATIVES MAY AFFECT STANDARD PRODUCTION SCHEDULES

Alternate Table Height 32" and Under

$196 / table

Specify code **BAH** *(Alternate Height 32" and under), indicate desired table height (32" or less), add $196.00 list per table*

Suggested typing height table is 26 ¾"
Suggested wheelchair height table is 32"
Suggested stand up height table is 42"

NOTE FOR OTHER TABLE HEIGHT REQUIREMENTS CONTACT VERSTEEL CUSTOMER SERVICE FOR STRUCTURAL DETAILS, PRICING AND AVAILABILITY

NOTE NOT ALL ELIGA TABLES ARE AVAILABLE WITH AN ALTERNATE TABLE HEIGHT. REFER TO PRICING PAGES OR CONTACT VERSTEEL CUSTOMER SERVICE.

Casters - Dual Hard Wheel Black Hard or Soft

$171 / table

Specify code CAS55 (Hard Wheel) or CAS57 (Soft Wheel), add $171.00 list per table

Dual wheel, black, 2" diameter, standard locking casters are available on X1 and TE base styles. Each is fitted into a reinforced caster receiver and must be specified at time of order. Caster option does not change the overall height of the table. See individual product pages for availability and ordering code.

Top Custom Cutout

$120 / cutout

Specify code **TCC** *(Top Custom Cutout), add $120.00 list per cutout*

Top Custom Cutout requires a drawing for production and is subject to approvals.

Table Link

$251 / table

Specify code **TLK** *(Table Link), add $251.00 list per table*

Table Link is for linking Versteel table configurations in typical room situations. Table link will prevent the accidental disconnection of power supply to adjacent tables. Available on tables with PVC, 3mm Wood, Wood Square, Wood Fluted and Ergo user side edge details.

Closed end link brackets are provided for tops without bases or tables with a base that does not allow the table to stand alone.

Table Link - Ends Only

$135 / table

Specify code **TLE** *(Table Link - Ends Only), add $135.00 list per table*

Table Link is for linking Versteel table configurations in typical room situations. Specify Table Link - Ends Only when your configuration requires linking on the table ends only. Available on tables with PVC, 3mm Wood, Wood Square, Wood Fluted and Ergo user side edge details. Table Link - Ends Only is included with electrical package options. This will prevent the accidental disconnection of power supply to adjacent tables.

Training Tables
Eliga

Questions?
800 876 2120

			top ›	Laminate PVC	Laminate Wood
			edge ›	Flat	Flat
			edge ordering code (square corner) ›	**LP7S**	**LW7S**
			top thickness ›	1″	1″
			top thickness price ›	1″	1″
Base Style	**Table Description**	**Model #**	**Product Wt**		
T1	20 x 48 Fix	**EGT1 2048REFX**	49	1189	1521
	20 x 48 Slim-Tilt	**EGT1 2048REST**	59	1706	2041
	20 x 48 Fix w/FixMod	**EGT1 2048REFX XM**	62	1488	2025
	20 x 48 Fix w/RemMod	**EGT1 2048REFX RM**	52	1511	2040
	20 x 48 Slim-Tilt w/RemMod	**EGT1 2048REST RM**	62	2065	2603
	20 x 48 Slim-Tilt w/HangMod	**EGT1 2048REST HM**	72	2065	2603
	20 x 48 Fix w/FixLightweightFormMod	**EGT1 2048REFX XL**	61	1511	2040
	20 x 48 Fix w/RemLightweightFormMod	**EGT1 2048REFX RL**	61	1511	2040
	20 x 48 Fix w/FixFormMod	**EGT1 2048REFX XF**	71	1630	1994
	20 x 60 Fix	**EGT1 2060REFX**	55	1290	1667
	20 x 60 Slim-Tilt	**EGT1 2060REST**	67	1803	2184
	20 x 60 Fix w/FixMod	**EGT1 2060REFX XM**	70	1716	2477
	20 x 60 Fix w/RemMod	**EGT1 2060REFX RM**	58	1760	2526
	20 x 60 Slim-Tilt w/RemMod	**EGT1 2060REST RM**	70	2281	3041
	20 x 60 Slim-Tilt w/HangMod	**EGT1 2060REST HM**	82	2281	3041
	20 x 60 Fix w/FixLightweightFormMod	**EGT1 2060REFX XL**	70	1760	2530
	20 x 60 Fix w/RemLightweightFormMod	**EGT1 2060REFX RL**	70	1760	2530
	20 x 60 Fix w/FixFormMod	**EGT1 2060REFX XF**	82	2041	2423
	20 x 72 Fix	**EGT1 2072REFX**	61	1348	1807
	20 x 72 Slim-Tilt	**EGT1 2072REST**	76	1864	2325
	20 x 72 Fix w/FixMod	**EGT1 2072REFX XM**	78	1859	3021
	20 x 72 Fix w/RemMod	**EGT1 2072REFX RM**	65	1903	3066
	20 x 72 Slim-Tilt w/RemMod	**EGT1 2072REST RM**	80	2424	3586
	20 x 72 Slim-Tilt w/HangMod	**EGT1 2072REST HM**	93	2424	3586
	20 x 72 Fix w/FixLightweightFormMod	**EGT1 2072REFX XL**	79	1906	3071
	20 x 72 Fix w/RemLightweightFormMod	**EGT1 2072REFX RL**	79	1906	3071
	20 x 72 Fix w/FixFormMod	**EGT1 2072REFX XF**	93	2102	2559
	20 x 84 Fix	**EGT1 2084REFX**	83	1488	2126
	20 x 84 Slim-Tilt	**EGT1 2084REST**	86	2007	2643
	20 x 84 Fix w/FixMod	**EGT1 2084REFX XM**	103	2125	3155
	20 x 84 Fix w/RemMod	**EGT1 2084REFX RM**	87	2153	3177
	20 x 84 Slim-Tilt w/RemMod	**EGT1 2084REST RM**	90	2796	4362
	20 x 84 Slim-Tilt w/HangMod	**EGT1 2084REST HM**	106	2796	4362

Note: Training tables are often used with lightweight computer accessories. For heavy duty applications, such as large scale computer equipment, multiple monitor mounts, etc., Versteel suggests adding a third leg or stretcher. The price of the 84", 90" and 96" models include a stretcher rail required for additional support. Contact Customer Service if you have specific application concerns or questions.

To Order, Specify...
1. Model Number
2. Top Material
3. Edge Style and Thickness
4. Edge Color
5. Base Color
6. Additional Options

Base Options	Code	Price
Casters (4), Dual Wheel Black Hard Wheel (to 72" length)	CAS55	$ 171
Casters (4), Dual Wheel Black Soft Wheel (to 72" length)	CAS57	$ 171

Finish Options		
Chrome		$ 649
Nickel		$ 710
Powder Coat, Standard		n/c
Powder Coat, Premium		$ 165
Platinum		$ 488

Top Options		
Table Link (all four sides)	TLK	$ 251
Table Link (20" ends only)	TLE	$ 135
Special Laminate	TSP	call
Custom Cutout (per cutout)	TCC	$ 120

Power + Data Options

Please reference the Power + Data Price List

Wire Management Options		
1 Oval Brush Grommet, Location A	WOA	$ 97
2 Oval Brush Grommets, Location E	WOE	$ 194
1 Oval Brush Grommet, Provide Location Print	WOG	$ 97
1 Round Grommet, Location A	WRA	$ 76
2 Round Grommets, Location E	WRE	$ 152
1 Round Grommet, Provide Location Print	WRG	$ 76

Training Tables
Eliga

Questions?
800 876 2120

			top ›	Laminate PVC	Laminate Wood
			edge ›	Flat	Flat
			edge ordering code (square corner) ›	**LP7S**	**LW7S**
			top thickness ›	1″	1″
			top thickness price ›	1″	1″
Base Style	**Table Description**	**Model #**	**Product Wt**		
T1	20 x 90 Fix	**EGT1 2090REFX**	88	1578	2360
	20 x 90 Slim-Tilt	**EGT1 2090REST**	91	2062	2849
	20 x 90 Fix w/FixMod	**EGT1 2090REFX XM**	110	2501	4068
	20 x 90 Fix w/RemMod	**EGT1 2090REFX RM**	92	2542	4110
	20 x 90 Slim-Tilt w/RemMod	**EGT1 2090REST RM**	95	3059	4624
	20 x 90 Slim-Tilt w/HangMod	**EGT1 2090REST HM**	113	3059	4624
	20 x 96 Fix	**EGT1 2096REFX**	92	1620	2403
	20 x 96 Slim-Tilt	**EGT1 2096REST**	96	2136	2920
	20 x 96 Fix w/FixMod	**EGT1 2096REFX XM**	116	2501	4068
	20 x 96 Fix w/RemMod	**EGT1 2096REFX RM**	97	2542	4110
	20 x 96 Slim-Tilt w/RemMod	**EGT1 2096REST RM**	101	3059	4624
	20 x 96 Slim-Tilt w/HangMod	**EGT1 2096REST HM**	120	3059	4624

Note: Training tables are often used with lightweight computer accessories. For heavy duty applications, such as large scale computer equipment, multiple monitor mounts, etc., Versteel suggests adding a third leg or stretcher. The price of the 84", 90" and 96" models include a stretcher rail required for additional support. Contact Customer Service if you have specific application concerns or questions.

To Order, Specify...
1. Model Number
2. Top Material
3. Edge Style and Thickness
4. Edge Color
5. Base Color
6. Additional Options

Finish Options

Chrome		$ 649
Nickel		$ 710
Powder Coat, Standard		n/c
Powder Coat, Premium		$ 165
Platinum		$ 488

Top Options

Table Link (all four sides)	TLK	$ 251
Table Link (20" ends only)	TLE	$ 135
Special Laminate	TSP	call
Custom Cutout (per cutout)	TCC	$ 120

Power + Data Options

Please reference the Power + Data Price List

Wire Management Options

1 Oval Brush Grommet, Location A	WOA	$ 97
2 Oval Brush Grommets, Location E	WOE	$ 194
1 Oval Brush Grommet, Provide Location Print	WOG	$ 97
1 Round Grommet, Location A	WRA	$ 76
2 Round Grommets, Location E	WRE	$ 152
1 Round Grommet, Provide Location Print	WRG	$ 76

Training Tables
Eliga

VERSTEEL

Questions?
800 876 2120

			top ›	Laminate PVC	Laminate Wood
			edge ›	Flat	Flat
			edge ordering code (square corner) ›	**LP7S**	**LW7S**
			top thickness ›	1"	1"
			top thickness price ›	1"	1"
Base Style	**Table Description**	**Model #**	**Product Wt**		
T1	24 x 48 Fix	**EGT1 2448REFX**	55	1247	1697
	24 x 48 Slim-Tilt	**EGT1 2448REST**	64	1767	2217
	24 x 48 Fix w/FixMod	**EGT1 2448REFX XM**	68	1563	1602
	24 x 48 Fix w/RemMod	**EGT1 2448REFX RM**	57	1584	1652
	24 x 48 Slim-Tilt w/RemMod	**EGT1 2448REST RM**	66	2119	2170
	24 x 48 Slim-Tilt w/HangMod	**EGT1 2448REST HM**	77	2119	2170
	24 x 48 Fix w/FixLightweightFormMod	**EGT1 2448REFX XL**	67	1584	1652
	24 x 48 Fix w/RemLightweightFormMod	**EGT1 2448REFX RL**	67	1584	1652
	24 x 48 Fix w/FixFormMod	**EGT1 2448REFX XF**	77	1697	1754
	24 x 60 Fix	**EGT1 2460REFX**	63	1332	1894
	24 x 60 Slim-Tilt	**EGT1 2460REST**	75	1849	2217
	24 x 60 Fix w/FixMod	**EGT1 2460REFX XM**	78	1759	1836
	24 x 60 Fix w/RemMod	**EGT1 2460REFX RM**	66	1808	1886
	24 x 60 Slim-Tilt w/RemMod	**EGT1 2460REST RM**	78	2325	2398
	24 x 60 Slim-Tilt w/HangMod	**EGT1 2460REST HM**	90	2325	2398
	24 x 60 Fix w/FixLightweightFormMod	**EGT1 2460REFX XL**	78	1808	1886
	24 x 60 Fix w/RemLightweightFormMod	**EGT1 2460REFX RL**	78	1808	1886
	24 x 60 Fix w/FixFormMod	**EGT1 2460REFX XF**	90	2082	2158
	24 x 72 Fix	**EGT1 2472REFX**	70	1528	2134
	24 x 72 Slim-Tilt	**EGT1 2472REST**	85	2041	2655
	24 x 72 Fix w/FixMod	**EGT1 2472REFX XM**	87	2030	2095
	24 x 72 Fix w/RemMod	**EGT1 2472REFX RM**	74	2076	2143
	24 x 72 Slim-Tilt w/RemMod	**EGT1 2472REST RM**	89	2593	2662
	24 x 72 Slim-Tilt w/HangMod	**EGT1 2472REST HM**	102	2593	2662
	24 x 72 Fix w/FixLightweightFormMod	**EGT1 2472REFX XL**	88	2079	2145
	24 x 72 Fix w/RemLightweightFormMod	**EGT1 2472REFX RL**	88	2079	2145
	24 x 72 Fix w/FixFormMod	**EGT1 2472REFX XF**	102	2273	2340
	24 x 84 Fix	**EGT1 2484REFX**	94	1611	2364
	24 x 84 Slim-Tilt	**EGT1 2484REST**	97	2128	2882
	24 x 84 Fix w/FixMod	**EGT1 2484REFX XM**	114	2280	2286
	24 x 84 Fix w/RemMod	**EGT1 2484REFX RM**	98	2309	2320
	24 x 84 Slim-Tilt w/RemMod	**EGT1 2484REST RM**	101	2843	4069
	24 x 84 Slim-Tilt w/HangMod	**EGT1 2484REST HM**	117	2843	4069

Note: Training tables are often used with lightweight computer accessories. For heavy duty applications, such as large scale computer equipment, multiple monitor mounts, etc., Versteel suggests adding a third leg or stretcher. The price of the 84", 90" and 96" models include a stretcher rail required for additional support. Contact Customer Service if you have specific application concerns or questions.

To Order, Specify...
1. Model Number
2. Top Material
3. Edge Style and Thickness
4. Edge Color
5. Base Color
6. Additional Options

Base Options	Code	Price
Casters (4), Dual Wheel Black Hard Wheel (to 72" length)	CAS55	$ 171
Casters (4), Dual Wheel Black Soft Wheel (to 72" length)	CAS57	$ 171

Finish Options		
Chrome		$ 649
Nickel		$ 710
Powder Coat, Standard		n/c
Powder Coat, Premium		$ 165
Platinum		$ 488

Top Options		
Table Link (all four sides)	TLK	$ 251
Table Link (24" ends only)	TLE	$ 135
Special Laminate	TSP	call
Custom Cutout (per cutout)	TCC	$ 120

Power + Data Options

Please reference the Power + Data Price List

Wire Management Options		
1 Oval Brush Grommet, Location A	WOA	$ 97
2 Oval Brush Grommets, Location E	WOE	$ 194
1 Oval Brush Grommet, Provide Location Print	WOG	$ 97
1 Round Grommet, Location A	WRA	$ 76
2 Round Grommets, Location E	WRE	$ 152
1 Round Grommet, Provide Location Print	WRG	$ 76

Training Tables
Eliga

Questions?
800 876 2120

			top ›	Laminate PVC	Laminate Wood
			edge ›	Flat	Flat
			edge ordering code (square corner) ›	**LP7S**	**LW7S**
			top thickness ›	1″	1″
			top thickness price ›	1″	1″
Base Style	**Table Description**	**Model #**	**Product Wt**		
T1	24 x 90 Fix	**EGT1 2490REFX**	100	1742	2567
	24 x 90 Slim-Tilt	**EGT1 2490REST**	103	2269	3063
	24 x 90 Fix w/FixMod	**EGT1 2490REFX XM**	122	2762	4335
	24 x 90 Fix w/RemMod	**EGT1 2490REFX RM**	104	2880	3746
	24 x 90 Slim-Tilt w/RemMod	**EGT1 2490REST RM**	107	3395	4260
	24 x 90 Slim-Tilt w/HangMod	**EGT1 2490REST HM**	125	3395	4260
	24 x 96 Fix	**EGT1 2496REFX**	105	1862	2726
	24 x 96 Slim-Tilt	**EGT1 2496REST**	109	2378	3246
	24 x 96 Fix w/FixMod	**EGT1 2496REFX XM**	129	2762	4335
	24 x 96 Fix w/RemMod	**EGT1 2496REFX RM**	110	2880	3746
	24 x 96 Slim-Tilt w/RemMod	**EGT1 2496REST RM**	114	3395	4260
	24 x 96 Slim-Tilt w/HangMod	**EGT1 2496REST HM**	133	3395	4260

Note: Training tables are often used with lightweight computer accessories. For heavy duty applications, such as large scale computer equipment, multiple monitor mounts, etc., Versteel suggests adding a third leg or stretcher. The price of the 84", 90" and 96" models include a stretcher rail required for additional support. Contact Customer Service if you have specific application concerns or questions.

To Order, Specify...
1. Model Number
2. Top Material
3. Edge Style and Thickness
4. Edge Color
5. Base Color
6. Additional Options

Finish Options

Chrome		$ 649
Nickel		$ 710
Powder Coat, Standard		n/c
Powder Coat, Premium		$ 165
Platinum		$ 488

Top Options

Table Link (all four sides)	TLK	$ 251
Table Link (24" ends only)	TLE	$ 135
Special Laminate	TSP	call
Custom Cutout (per cutout)	TCC	$ 120

Power + Data Options

Please reference the Power + Data Price List

Wire Management Options

1 Oval Brush Grommet, Location A	WOA	$ 97
2 Oval Brush Grommets, Location E	WOE	$ 194
1 Oval Brush Grommet, Provide Location Print	WOG	$ 97
1 Round Grommet, Location A	WRA	$ 76
2 Round Grommets, Location E	WRE	$ 152
1 Round Grommet, Provide Location Print	WRG	$ 76

Training Tables
Eliga

Questions?
800 876 2120

			top ›	Laminate PVC	Laminate Wood
			edge ›	Flat	Flat
			edge ordering code (square corner) ›	**LP7S**	**LW7S**
			top thickness ›	1″	1″
			top thickness price ›	1″	1″
Base Style	**Table Description**	**Model #**	**Product Wt**		
T1	30 x 48 Fix	**EGT1 3048REFX**	63	1375	1846
	30 x 48 Slim-Tilt	**EGT1 3048REST**	75	1895	2364
	30 x 48 Fix w/FixMod	**EGT1 3048REFX XM**	76	1692	2364
	30 x 48 Fix w/RemMod	**EGT1 3048REFX RM**	66	1721	2381
	30 x 48 Slim-Tilt w/RemMod	**EGT1 3048REST RM**	78	2259	2936
	30 x 48 Slim-Tilt w/HangMod	**EGT1 3048REST HM**	88	2259	2936
	30 x 48 Fix w/FixLightweightFormMod	**EGT1 3048REFX XL**	75	1721	2381
	30 x 48 Fix w/RemLightweightFormMod	**EGT1 3048REFX RL**	75	1721	2775
	30 x 48 Fix w/FixFormMod	**EGT1 3048REFX XF**	85	1841	2345
	30 x 60 Fix	**EGT1 3060REFX**	73	1460	2065
	30 x 60 Slim-Tilt	**EGT1 3060REST**	87	1978	2581
	30 x 60 Fix w/FixMod	**EGT1 3060REFX XM**	88	1890	2875
	30 x 60 Fix w/RemMod	**EGT1 3060REFX RM**	76	1937	2953
	30 x 60 Slim-Tilt w/RemMod	**EGT1 3060REST RM**	90	2455	3439
	30 x 60 Slim-Tilt w/HangMod	**EGT1 3060REST HM**	102	2455	3439
	30 x 60 Fix w/FixLightweightFormMod	**EGT1 3060REFX XL**	88	1937	2919
	30 x 60 Fix w/RemLightweightFormMod	**EGT1 3060REFX RL**	88	1937	2919
	30 x 60 Fix w/FixFormMod	**EGT1 3060REFX XF**	100	2209	2816
	30 x 72 Fix	**EGT1 3072REFX**	83	1573	2283
	30 x 72 Slim-Tilt	**EGT1 3072REST**	100	2092	2798
	30 x 72 Fix w/FixMod	**EGT1 3072REFX XM**	100	2080	3497
	30 x 72 Fix w/RemMod	**EGT1 3072REFX RM**	87	2128	3541
	30 x 72 Slim-Tilt w/RemMod	**EGT1 3072REST RM**	104	2646	4058
	30 x 72 Slim-Tilt w/HangMod	**EGT1 3072REST HM**	117	2646	4058
	30 x 72 Fix w/FixLightweightFormMod	**EGT1 3072REFX XL**	101	2129	3542
	30 x 72 Fix w/RemLightweightFormMod	**EGT1 3072REFX RL**	101	2129	3542
	30 x 72 Fix w/FixFormMod	**EGT1 3072REFX XF**	115	2327	3035
	30 x 84 Fix	**EGT1 3084REFX**	109	1687	2576
	30 x 84 Slim-Tilt	**EGT1 3084REST**	114	2202	3092
	30 x 84 Fix w/FixMod	**EGT1 3084REFX XM**	129	2368	3765
	30 x 84 Fix w/RemMod	**EGT1 3084REFX RM**	113	2401	3788
	30 x 84 Slim-Tilt w/RemMod	**EGT1 3084REST RM**	118	2842	4654
	30 x 84 Slim-Tilt w/HangMod	**EGT1 3084REST HM**	134	2842	4654

Note: Training tables are often used with lightweight computer accessories. For heavy duty applications, such as large scale computer equipment, multiple monitor mounts, etc., Versteel suggests adding a third leg or stretcher. The price of the 84", 90" and 96" models include a stretcher rail required for additional support. Contact Customer Service if you have specific application concerns or questions.

To Order, Specify...
1. Model Number
2. Top Material
3. Edge Style and Thickness
4. Edge Color
5. Base Color
6. Additional Options

Base Options	Code	Price
Casters (4), Dual Wheel Black Hard Wheel (to 72" length)	CAS55	$ 171
Casters (4), Dual Wheel Black Soft Wheel (to 72" length)	CAS57	$ 171

Finish Options		
Chrome		$ 649
Nickel		$ 710
Powder Coat, Standard		n/c
Powder Coat, Premium		$ 165
Platinum		$ 488

Top Options		
Table Link (all four sides)	TLK	$ 251
Table Link (30" ends only)	TLE	$ 135
Special Laminate	TSP	call
Custom Cutout (per cutout)	TCC	$ 120

Power + Data Options

Please reference the Power + Data Price List

Wire Management Options		
1 Oval Brush Grommet, Location A	WOA	$ 97
2 Oval Brush Grommets, Location E	WOE	$ 194
1 Oval Brush Grommet, Provide Location Print	WOG	$ 97
1 Round Grommet, Location A	WRA	$ 76
2 Round Grommets, Location E	WRE	$ 152
1 Round Grommet, Provide Location Print	WRG	$ 76

Training Tables
Eliga

Questions?
800 876 2120

			top ›	Laminate PVC	Laminate Wood
			edge ›	Flat	Flat
			edge ordering code (square corner) ›	**LP7S**	**LW7S**
			top thickness ›	1″	1″
			top thickness price ›	1″	1″
Base Style	**Table Description**	**Model #**	**Product Wt**		
T1	30 x 90 Fix	**EGT1 3090REFX**	116	1800	2780
	30 x 90 Slim-Tilt	**EGT1 3090REST**	121	2309	3238
	30 x 90 Fix w/FixMod	**EGT1 3090REFX XM**	138	2776	4618
	30 x 90 Fix w/RemMod	**EGT1 3090REFX RM**	120	2819	4662
	30 x 90 Slim-Tilt w/RemMod	**EGT1 3090REST RM**	125	3336	5178
	30 x 90 Slim-Tilt w/HangMod	**EGT1 3090REST HM**	143	3336	5178
	30 x 96 Fix	**EGT1 3096REFX**	122	1894	2953
	30 x 96 Slim-Tilt	**EGT1 3096REST**	128	2412	3472
	30 x 96 Fix w/FixMod	**EGT1 3096REFX XM**	146	2776	4618
	30 x 96 Fix w/RemMod	**EGT1 3096REFX RM**	127	2819	4662
	30 x 96 Slim-Tilt w/RemMod	**EGT1 3096REST RM**	133	3336	5178
	30 x 96 Slim-Tilt w/HangMod	**EGT1 3096REST HM**	152	3336	5178

Note: Training tables are often used with lightweight computer accessories. For heavy duty applications, such as large scale computer equipment, multiple monitor mounts, etc., Versteel suggests adding a third leg or stretcher. The price of the 84", 90" and 96" models include a stretcher rail required for additional support. Contact Customer Service if you have specific application concerns or questions.

To Order, Specify...
1. Model Number
2. Top Material
3. Edge Style and Thickness
4. Edge Color
5. Base Color
6. Additional Options

Finish Options

Chrome		$ 649
Nickel		$ 710
Powder Coat, Standard		n/c
Powder Coat, Premium		$ 165
Platinum		$ 488

Top Options

Table Link (all four sides)	TLK	$ 251
Table Link (30" ends only)	TLE	$ 135
Special Laminate	TSP	call
Custom Cutout (per cutout)	TCC	$ 120

Power + Data Options

Please reference the Power + Data Price List

Wire Management Options

1 Oval Brush Grommet, Location A	WOA	$ 97
2 Oval Brush Grommets, Location E	WOE	$ 194
1 Oval Brush Grommet, Provide Location Print	WOG	$ 97
1 Round Grommet, Location A	WRA	$ 76
2 Round Grommets, Location E	WRE	$ 152
1 Round Grommet, Provide Location Print	WRG	$ 76

Training Tables
Eliga

Questions?
800 876 2120

			top ›	Laminate PVC	Laminate Wood
			edge ›	Flat	Flat
			edge ordering code (square corner) ›	**LP7S**	**LW7S**
			top thickness ›	1"	1"
			top thickness price ›	1"	1"
Base Style	**Table Description**	**Model #**	**Product Wt**		
T1	36 x 48 Fix	**EGT1 3648REFX**	71	1514	2030
	36 x 48 Tilt	**EGT1 3648RETL**	83	2070	2584
	36 x 48 Fix w/FixMod	**EGT1 3648REFX XM**	84	1860	2602
	36 x 48 Fix w/RemMod	**EGT1 3648REFX RM**	74	1891	2620
	36 x 48 Tilt w/RemMod	**EGT1 3648RETL RM**	86	2468	3213
	36 x 48 Tilt w/HangMod	**EGT1 3648RETL HM**	96	2468	3213
	36 x 48 Fix w/FixLightweightFormMod	**EGT1 3648REFX XL**	83	1891	2620
	36 x 48 Fix w/RemLightweightFormMod	**EGT1 3648REFX RL**	83	1891	3055
	36 x 48 Fix w/FixFormMod	**EGT1 3648REFX XF**	93	2027	2581
	36 x 60 Fix	**EGT1 3660REFX**	83	1608	2268
	36 x 60 Tilt	**EGT1 3660RETL**	97	2158	2822
	36 x 60 Fix w/FixMod	**EGT1 3660REFX XM**	98	2079	3160
	36 x 60 Fix w/RemMod	**EGT1 3660REFX RM**	86	2129	3211
	36 x 60 Tilt w/RemMod	**EGT1 3660RETL RM**	100	2685	3769
	36 x 60 Tilt w/HangMod	**EGT1 3660RETL HM**	112	2685	3769
	36 x 60 Fix w/FixLightweightFormMod	**EGT1 3660REFX XL**	98	2129	3210
	36 x 60 Fix w/RemLightweightFormMod	**EGT1 3660REFX RL**	98	2129	3210
	36 x 60 Fix w/FixFormMod	**EGT1 3660REFX XF**	110	2434	3097
	36 x 72 Fix	**EGT1 3672REFX**	95	1730	2511
	36 x 72 Tilt	**EGT1 3672RETL**	112	2285	3061
	36 x 72 Fix w/FixMod	**EGT1 3672REFX XM**	112	2288	3847
	36 x 72 Fix w/RemMod	**EGT1 3672REFX RM**	99	2343	3894
	36 x 72 Tilt w/RemMod	**EGT1 3672RETL RM**	114	2893	4450
	36 x 72 Tilt w/HangMod	**EGT1 3672RETL HM**	129	2893	4450
	36 x 72 Fix w/FixLightweightFormMod	**EGT1 3672REFX XL**	113	2345	3898
	36 x 72 Fix w/RemLightweightFormMod	**EGT1 3672REFX RL**	113	2345	3898
	36 x 72 Fix w/FixFormMod	**EGT1 3672REFX XF**	127	2559	3338
	36 x 84 Fix	**EGT1 3684REFX**	123	1855	2831
	36 x 84 Tilt	**EGT1 3684RETL**	128	2406	3388
	36 x 84 Fix w/FixMod	**EGT1 3684REFX XM**	143	2607	4140
	36 x 84 Fix w/RemMod	**EGT1 3684REFX RM**	127	2641	4167
	36 x 84 Tilt w/RemMod	**EGT1 3684RETL RM**	132	3110	5108
	36 x 84 Tilt w/HangMod	**EGT1 3684RETL HM**	148	3110	5108

Note: Training tables are often used with lightweight computer accessories. For heavy duty applications, such as large scale computer equipment, multiple monitor mounts, etc., Versteel suggests adding a third leg or stretcher. The price of the 84", 90" and 96" models include a stretcher rail required for additional support. Contact Customer Service if you have specific application concerns or questions.

To Order, Specify...

1. Model Number
2. Top Material
3. Edge Style and Thickness
4. Edge Color
5. Base Color
6. Additional Options

Base Options	Code	Price
Casters (4), Dual Wheel Black Hard Wheel (to 72" length)	CAS55	$ 171
Casters (4), Dual Wheel Black Soft Wheel (to 72" length)	CAS57	$ 171

Finish Options		
Chrome		$ 649
Nickel		$ 710
Powder Coat, Standard		n/c
Powder Coat, Premium		$ 165
Platinum		$ 488

Top Options		
Table Link (all four sides)	TLK	$ 251
Table Link (36" ends only)	TLE	$ 135
Special Laminate	TSP	call
Custom Cutout (per cutout)	TCC	$ 120

Power + Data Options

Please reference the Power + Data Price List

Wire Management Options		
1 Oval Brush Grommet, Location A	WOA	$ 97
2 Oval Brush Grommets, Location E	WOE	$ 194
1 Oval Brush Grommet, Provide Location Print	WOG	$ 97
1 Round Grommet, Location A	WRA	$ 76
2 Round Grommets, Location E	WRE	$ 152
1 Round Grommet, Provide Location Print	WRG	$ 76

Training Tables
Eliga

Questions?
800 876 2120

			top ›	Laminate PVC	Laminate Wood
			edge ›	Flat	Flat
			edge ordering code (square corner) ›	**LP7S**	**LW7S**
			top thickness ›	1"	1"
			top thickness price ›	1"	1"
Base Style	**Table Description**	**Model #**	**Product Wt**		
T1	36 x 90 Fix	**EGT1 3690REFX**	131	1978	3058
	36 x 90 Tilt	**EGT1 3690RETL**	136	2522	3547
	36 x 90 Fix w/FixMod	**EGT1 3690REFX XM**	153	3056	5081
	36 x 90 Fix w/RemMod	**EGT1 3690REFX RM**	135	3098	5128
	36 x 90 Tilt w/RemMod	**EGT1 3690RETL RM**	140	3654	5680
	36 x 90 Tilt w/HangMod	**EGT1 3690RETL HM**	158	3654	5680
	36 x 96 Fix	**EGT1 3696REFX**	138	2082	3248
	36 x 96 Tilt	**EGT1 3696RETL**	144	2637	3803
	36 x 96 Fix w/FixMod	**EGT1 3696REFX XM**	162	3056	5081
	36 x 96 Fix w/RemMod	**EGT1 3696REFX RM**	143	3098	5128
	36 x 96 Tilt w/RemMod	**EGT1 3696RETL RM**	149	3654	5680
	36 x 96 Tilt w/HangMod	**EGT1 3696RETL HM**	168	3654	5680

Note: Training tables are often used with lightweight computer accessories. For heavy duty applications, such as large scale computer equipment, multiple monitor mounts, etc., Versteel suggests adding a third leg or stretcher. The price of the 84", 90" and 96" models include a stretcher rail required for additional support. Contact Customer Service if you have specific application concerns or questions.

To Order, Specify...
1. Model Number
2. Top Material
3. Edge Style and Thickness
4. Edge Color
5. Base Color
6. Additional Options

Finish Options

Chrome		$ 649
Nickel		$ 710
Powder Coat, Standard		n/c
Powder Coat, Premium		$ 165
Platinum		$ 488

Top Options

Table Link (all four sides)	TLK	$ 251
Table Link (36" ends only)	TLE	$ 135
Special Laminate	TSP	call
Custom Cutout (per cutout)	TCC	$ 120

Power + Data Options

Please reference the Power + Data Price List

Wire Management Options

1 Oval Brush Grommet, Location A	WOA	$ 97
2 Oval Brush Grommets, Location E	WOE	$ 194
1 Oval Brush Grommet, Provide Location Print	WOG	$ 97
1 Round Grommet, Location A	WRA	$ 76
2 Round Grommets, Location E	WRE	$ 152
1 Round Grommet, Provide Location Print	WRG	$ 76

Training Tables
Eliga

Questions?
800 876 2120

			top ›	Laminate PVC	Laminate Wood
			edge ›	Flat	Flat
			edge ordering code (square corner) ›	**LP7S**	**LW7S**
			top thickness ›	1"	1"
			top thickness price ›	1"	1"
Base Style	**Table Description**	**Model #**	**Product Wt**		
TC	24 x 48 Fix	**EGTC 2448REFX**	55	1247	1697
	24 x 48 Slim-Tilt	**EGTC 2448REST**	64	1767	2217
	24 x 48 Fix w/FixMod	**EGTC 2448REFX XM**	68	1563	1602
	24 x 48 Fix w/RemMod	**EGTC 2448REFX RM**	57	1584	1652
	24 x 48 Slim-Tilt w/RemMod	**EGTC 2448REST RM**	66	2119	2170
	24 x 48 Slim-Tilt w/HangMod	**EGTC 2448REST HM**	77	2119	2170
	24 x 48 Fix w/FixLightweightFormMod	**EGTC 2448REFX XL**	67	1584	1652
	24 x 48 Fix w/RemLightweightFormMod	**EGTC 2448REFX RL**	67	1584	1652
	24 x 48 Fix w/FixFormMod	**EGTC 2448REFX XF**	77	1697	1754
	24 x 60 Fix	**EGTC 2460REFX**	63	1332	1894
	24 x 60 Slim-Tilt	**EGTC 2460REST**	75	1767	2217
	24 x 60 Fix w/FixMod	**EGTC 2460REFX XM**	78	1759	1836
	24 x 60 Fix w/RemMod	**EGTC 2460REFX RM**	66	1808	1886
	24 x 60 Slim-Tilt w/RemMod	**EGTC 2460REST RM**	78	2325	2398
	24 x 60 Slim-Tilt w/HangMod	**EGTC 2460REST HM**	90	2325	2398
	24 x 60 Fix w/FixLightweightFormMod	**EGTC 2460REFX XL**	78	1808	1886
	24 x 60 Fix w/RemLightweightFormMod	**EGTC 2460REFX RL**	78	1808	1886
	24 x 60 Fix w/FixFormMod	**EGTC 2460REFX XF**	90	2082	2158
	24 x 72 Fix	**EGTC 2472REFX**	70	1528	2134
	24 x 72 Slim-Tilt	**EGTC 2472REST**	85	2041	2655
	24 x 72 Fix w/FixMod	**EGTC 2472REFX XM**	87	2030	2095
	24 x 72 Fix w/RemMod	**EGTC 2472REFX RM**	74	2076	2143
	24 x 72 Slim-Tilt w/RemMod	**EGTC 2472REST RM**	89	2593	2662
	24 x 72 Slim-Tilt w/HangMod	**EGTC 2472REST HM**	102	2593	2662
	24 x 72 Fix w/FixLightweightFormMod	**EGTC 2472REFX XL**	88	2079	2145
	24 x 72 Fix w/RemLightweightFormMod	**EGTC 2472REFX RL**	88	2079	2145
	24 x 72 Fix w/FixFormMod	**EGTC 2472REFX XF**	102	2273	2340
	24 x 84 Fix	**EGTC 2484REFX**	94	1611	2364
	24 x 84 Slim-Tilt	**EGTC 2484REST**	97	2128	2882
	24 x 84 Fix w/FixMod	**EGTC 2484REFX XM**	114	2280	2286
	24 x 84 Fix w/RemMod	**EGTC 2484REFX RM**	98	2309	2320
	24 x 84 Slim-Tilt w/RemMod	**EGTC 2484REST RM**	101	2843	4069
	24 x 84 Slim-Tilt w/HangMod	**EGTC 2484REST HM**	117	2843	4069

Note: Training tables are often used with lightweight computer accessories. For heavy duty applications, such as large scale computer equipment, multiple monitor mounts, etc., Versteel suggests adding a third leg or stretcher. The price of the 84", 90" and 96" models include a stretcher rail required for additional support. Contact Customer Service if you have specific application concerns or questions.

To Order, Specify...
1. Model Number
2. Top Material
3. Edge Style and Thickness
4. Edge Color
5. Base Color
6. Additional Options

Base Options	Code	Price
Casters (4), Dual Wheel Black Hard Wheel (to 72" length)	CAS55	$ 171
Casters (4), Dual Wheel Black Soft Wheel (to 72" length)	CAS57	$ 171

Finish Options		
Chrome		$ 649
Nickel		$ 710
Powder Coat, Standard		n/c
Powder Coat, Premium		$ 165
Platinum		$ 488

Top Options		
Table Link (all four sides)	TLK	$ 251
Table Link (24" ends only)	TLE	$ 135
Special Laminate	TSP	call
Custom Cutout (per cutout)	TCC	$ 120

Power + Data Options

Please reference the Power + Data Price List

Wire Management Options		
1 Oval Brush Grommet, Location A	WOA	$ 97
2 Oval Brush Grommets, Location E	WOE	$ 194
1 Oval Brush Grommet, Provide Location Print	WOG	$ 97
1 Round Grommet, Location A	WRA	$ 76
2 Round Grommets, Location E	WRE	$ 152
1 Round Grommet, Provide Location Print	WRG	$ 76

Training Tables
Eliga

VERSTEEL

Questions?
800 876 2120

			top ›	Laminate PVC	Laminate Wood
			edge ›	Flat	Flat
			edge ordering code (square corner) ›	**LP7S**	**LW7S**
			top thickness ›	1″	1″
			top thickness price ›	1″	1″
Base Style	**Table Description**	**Model #**	**Product Wt**		
TC	24 x 90 Fix	**EGTC 2490REFX**	100	1742	2567
	24 x 90 Slim-Tilt	**EGTC 2490REST**	103	2269	3063
	24 x 90 Fix w/FixMod	**EGTC 2490REFX XM**	122	2762	4335
	24 x 90 Fix w/RemMod	**EGTC 2490REFX RM**	104	2880	3746
	24 x 90 Slim-Tilt w/RemMod	**EGTC 2490REST RM**	107	3395	4260
	24 x 90 Slim-Tilt w/HangMod	**EGTC 2490REST HM**	125	3395	4260
	24 x 96 Fix	**EGTC 2496REFX**	105	1862	2726
	24 x 96 Slim-Tilt	**EGTC 2496REST**	109	2378	3246
	24 x 96 Fix w/FixMod	**EGTC 2496REFX XM**	129	2762	4335
	24 x 96 Fix w/RemMod	**EGTC 2496REFX RM**	110	2880	3746
	24 x 96 Slim-Tilt w/RemMod	**EGTC 2496REST RM**	114	3395	4260
	24 x 96 Slim-Tilt w/HangMod	**EGTC 2496REST HM**	133	3395	4260

Note: Training tables are often used with lightweight computer accessories. For heavy duty applications, such as large scale computer equipment, multiple monitor mounts, etc., Versteel suggests adding a third leg or stretcher. The price of the 84", 90" and 96" models include a stretcher rail required for additional support. Contact Customer Service if you have specific application concerns or questions.

To Order, Specify...

1. Model Number
2. Top Material
3. Edge Style and Thickness
4. Edge Color
5. Base Color
6. Additional Options

Finish Options

Chrome		$ 649
Nickel		$ 710
Powder Coat, Standard		n/c
Powder Coat, Premium		$ 165
Platinum		$ 488

Top Options

Table Link (all four sides)	TLK	$ 251
Table Link (24" ends only)	TLE	$ 135
Special Laminate	TSP	call
Custom Cutout (per cutout)	TCC	$ 120

Power + Data Options

Please reference the Power + Data Price List

Wire Management Options

1 Oval Brush Grommet, Location A	WOA	$ 97
2 Oval Brush Grommets, Location E	WOE	$ 194
1 Oval Brush Grommet, Provide Location Print	WOG	$ 97
1 Round Grommet, Location A	WRA	$ 76
2 Round Grommets, Location E	WRE	$ 152
1 Round Grommet, Provide Location Print	WRG	$ 76

Training Tables
Eliga

Questions?
800 876 2120

			top ›	Laminate PVC	Laminate Wood
			edge ›	Flat	Flat
			edge ordering code (square corner) ›	**LP7S**	**LW7S**
			top thickness ›	1″	1″
			top thickness price ›	1″	1″
Base Style	**Table Description**	**Model #**	**Product Wt**		
TC	30 x 48 Fix	**EGTC 3048REFX**	63	1375	1846
	30 x 48 Slim-Tilt	**EGTC 3048REST**	75	1895	2364
	30 x 48 Fix w/FixMod	**EGTC 3048REFX XM**	76	1692	2364
	30 x 48 Fix w/RemMod	**EGTC 3048REFX RM**	66	1721	2381
	30 x 48 Slim-Tilt w/RemMod	**EGTC 3048REST RM**	78	2259	2936
	30 x 48 Slim-Tilt w/HangMod	**EGTC 3048REST HM**	88	2259	2936
	30 x 48 Fix w/FixLightweightFormMod	**EGTC 3048REFX XL**	75	1721	2381
	30 x 48 Fix w/RemLightweightFormMod	**EGTC 3048REFX RL**	75	1721	2775
	30 x 48 Fix w/FixFormMod	**EGTC 3048REFX XF**	85	1841	2345
	30 x 60 Fix	**EGTC 3060REFX**	73	1460	2065
	30 x 60 Slim-Tilt	**EGTC 3060REST**	87	1978	2581
	30 x 60 Fix w/FixMod	**EGTC 3060REFX XM**	88	1890	2875
	30 x 60 Fix w/RemMod	**EGTC 3060REFX RM**	76	1937	2920
	30 x 60 Slim-Tilt w/RemMod	**EGTC 3060REST RM**	90	2455	3439
	30 x 60 Slim-Tilt w/HangMod	**EGTC 3060REST HM**	102	2455	3439
	30 x 60 Fix w/FixLightweightFormMod	**EGTC 3060REFX XL**	88	1937	2919
	30 x 60 Fix w/RemLightweightFormMod	**EGTC 3060REFX RL**	88	1937	2919
	30 x 60 Fix w/FixFormMod	**EGTC 3060REFX XF**	100	2209	2816
	30 x 72 Fix	**EGTC 3072REFX**	83	1573	2283
	30 x 72 Slim-Tilt	**EGTC 3072REST**	100	2092	2798
	30 x 72 Fix w/FixMod	**EGTC 3072REFX XM**	100	2080	3497
	30 x 72 Fix w/RemMod	**EGTC 3072REFX RM**	87	2128	3541
	30 x 72 Slim-Tilt w/RemMod	**EGTC 3072REST RM**	104	2646	4058
	30 x 72 Slim-Tilt w/HangMod	**EGTC 3072REST HM**	117	2646	4058
	30 x 72 Fix w/FixLightweightFormMod	**EGTC 3072REFX XL**	101	2129	3542
	30 x 72 Fix w/RemLightweightFormMod	**EGTC 3072REFX RL**	101	2129	3542
	30 x 72 Fix w/FixFormMod	**EGTC 3072REFX XF**	115	2327	3035
	30 x 84 Fix	**EGTC 3084REFX**	109	1687	2576
	30 x 84 Slim-Tilt	**EGTC 3084REST**	114	2202	3092
	30 x 84 Fix w/FixMod	**EGTC 3084REFX XM**	129	2368	3765
	30 x 84 Fix w/RemMod	**EGTC 3084REFX RM**	113	2401	3788
	30 x 84 Slim-Tilt w/RemMod	**EGTC 3084REST RM**	118	2842	4654
	30 x 84 Slim-Tilt w/HangMod	**EGTC 3084REST HM**	134	2842	4654

Note: Training tables are often used with lightweight computer accessories. For heavy duty applications, such as large scale computer equipment, multiple monitor mounts, etc., Versteel suggests adding a third leg or stretcher. The price of the 84", 90" and 96" models include a stretcher rail required for additional support. Contact Customer Service if you have specific application concerns or questions.

To Order, Specify...

1. Model Number
2. Top Material
3. Edge Style and Thickness
4. Edge Color
5. Base Color
6. Additional Options

Base Options	Code	Price
Casters (4), Dual Wheel Black Hard Wheel (to 72" length)	CAS55	$ 171
Casters (4), Dual Wheel Black Soft Wheel (to 72" length)	CAS57	$ 171

Finish Options		
Chrome		$ 649
Nickel		$ 710
Powder Coat, Standard		n/c
Powder Coat, Premium		$ 165
Platinum		$ 488

Top Options		
Table Link (all four sides)	TLK	$ 251
Table Link (30" ends only)	TLE	$ 135
Special Laminate	TSP	call
Custom Cutout (per cutout)	TCC	$ 120

Power + Data Options

Please reference the Power + Data Price List

Wire Management Options		
1 Oval Brush Grommet, Location A	WOA	$ 97
2 Oval Brush Grommets, Location E	WOE	$ 194
1 Oval Brush Grommet, Provide Location Print	WOG	$ 97
1 Round Grommet, Location A	WRA	$ 76
2 Round Grommets, Location E	WRE	$ 152
1 Round Grommet, Provide Location Print	WRG	$ 76

Training Tables
Eliga

Questions?
800 876 2120

			top ›	Laminate PVC	Laminate Wood
			edge ›	Flat	Flat
			edge ordering code (square corner) ›	**LP7S**	**LW7S**
			top thickness ›	1″	1″
			top thickness price ›	1″	1″
Base Style	**Table Description**	**Model #**	**Product Wt**		
TC	30 x 90 Fix	**EGTC 3090REFX**	116	1800	2780
	30 x 90 Slim-Tilt	**EGTC 3090REST**	121	2309	3238
	30 x 90 Fix w/FixMod	**EGTC 3090REFX XM**	138	2776	4618
	30 x 90 Fix w/RemMod	**EGTC 3090REFX RM**	120	2819	4662
	30 x 90 Slim-Tilt w/RemMod	**EGTC 3090REST RM**	125	3336	5178
	30 x 90 Slim-Tilt w/HangMod	**EGTC 3090REST HM**	143	3336	5178
	30 x 96 Fix	**EGTC 3096REFX**	122	1894	2953
	30 x 96 Slim-Tilt	**EGTC 3096REST**	128	2412	3472
	30 x 96 Fix w/FixMod	**EGTC 3096REFX XM**	146	2776	4618
	30 x 96 Fix w/RemMod	**EGTC 3096REFX RM**	127	2819	4662
	30 x 96 Slim-Tilt w/RemMod	**EGTC 3096REST RM**	133	3336	5178
	30 x 96 Slim-Tilt w/HangMod	**EGTC 3096REST HM**	152	3336	5178

Note: Training tables are often used with lightweight computer accessories. For heavy duty applications, such as large scale computer equipment, multiple monitor mounts, etc., Versteel suggests adding a third leg or stretcher. The price of the 84", 90" and 96" models include a stretcher rail required for additional support. Contact Customer Service if you have specific application concerns or questions.

To Order, Specify...

1. Model Number
2. Top Material
3. Edge Style and Thickness
4. Edge Color
5. Base Color
6. Additional Options

Finish Options

Chrome		$ 649
Nickel		$ 710
Powder Coat, Standard		n/c
Powder Coat, Premium		$ 165
Platinum		$ 488

Top Options

Table Link (all four sides)	TLK	$ 251
Table Link (30" ends only)	TLE	$ 135
Special Laminate	TSP	call
Custom Cutout (per cutout)	TCC	$ 120

Power + Data Options

Please reference the Power + Data Price List

Wire Management Options

1 Oval Brush Grommet, Location A	WOA	$ 97
2 Oval Brush Grommets, Location E	WOE	$ 194
1 Oval Brush Grommet, Provide Location Print	WOG	$ 97
1 Round Grommet, Location A	WRA	$ 76
2 Round Grommets, Location E	WRE	$ 152
1 Round Grommet, Provide Location Print	WRG	$ 76

All prices are delivered list price effective with date printed on cover and supersedes all other published price lists. Versteel reserves the right to change prices or specifications without prior notice. Orders are accepted subject to price prevailing at time of shipment.

versteel.com
Made in America
800 876 2120